Errata

Title & Document Type: 8562A/B Spectrum Analyzer Component-Level Information Packet

Manual Part Number: 08562-60112

Revision Date: July 1990

HP References in this Manual

This manual may contain references to HP or Hewlett-Packard. Please note that Hewlett-Packard's former test and measurement, semiconductor products and chemical analysis businesses are now part of Agilent Technologies. We have made no changes to this manual copy. The HP XXXX referred to in this document is now the Agilent XXXX. For example, model number HP8648A is now model number Agilent 8648A.

About this Manual

We've added this manual to the Agilent website in an effort to help you support your product. This manual provides the best information we could find. It may be incomplete or contain dated information, and the scan quality may not be ideal. If we find a better copy in the future, we will add it to the Agilent website.

Support for Your Product

Agilent no longer sells or supports this product. You will find any other available product information on the Agilent Test & Measurement website:

www.tm.agilent.com

Search for the model number of this product, and the resulting product page will guide you to any available information. Our service centers may be able to perform calibration if no repair parts are needed, but no other support from Agilent is available.

Agilent Technologies

Component-Level Information Packet
for 08562-60112
CRT Driver

Copyright © 1990 Hewlett-Packard Company

All Rights Reserved.
Reproduction, adaptation, or translation
without prior written permission
is prohibited, except as allowed
under the copyright laws.

HP Document Part Number 08562-90117

Printed July 1990
Printed In USA

The information contained in this document is subject to change without notice.

HEWLETT PACKARD

Display Adjustment Supplement

Supplement Part Number: 08562-90157

Supplement Print Date: May 1, 1991

This supplement updates the following documents:

HP 8562A/B Service Manual

Manual Part Number: 08562-90123
Manual Print Date: December 1990

HP 8562A/B Component-Level Information

Manual Part Number: 08562-90124
Manual Print Date: December 1990

Purpose of This Display Supplement

Recent changes in the HP 8561A and HP 8562A/B Spectrum Analyzers (serial prefix 3119A and above) involved using new and different display circuitry. This supplement provides the adjustment, troubleshooting and replacement parts information related to this change.

The following parts were involved in this change:

- CRT A18V1, HP part number 2090-0225.
- A17 CRT Driver Assembly, HP part number 08562-90112.
- A18MP1 CRT Wiring Assembly, HP part number 5062-7097.
- W9 Cable Assembly, CRT Yoke, HP part number 5062-6842.

Future CRT replacements will be accomplished using a kit which includes the above parts.

If your instrument has an A17 CRT Driver Assembly HP part number 08562-90112 or any of the above parts, this supplement should be used to adjust and troubleshoot the instrument or for ordering replacement parts.

These pages can be used to replace the existing pages in your manual or the package can be placed in the appendix.

Table 2-2. Adjustable Components (2 of 3)

Reference Designator	Adjustment Name	Adjustment Number	Description
A5T502	XTAL CTR 4	3	Adjusts center frequency of fourth stage of crystal bandwidth filter to 10 7 MHz.
A6R410	HV ADJ	1	Adjusts the voltage between A6TP405 and A6TP401 to the voltage marked on the A6A1 High Voltage Module
A14R42	6 01 GHz	6	Adjusts the main coil tune driver current at a YTO frequency of 6.01 GHz (near the upper YTO frequency limit).
A14R76	FM SPAN	6	Adjusts the FM span accuracy by affecting the sensitivity of the FM coil driver.
A14R93	3.2 GHz	6	Adjusts the main coil fixed driver current at a YTO frequency of 3.2 GHz (near the lower YTO frequency limit).
A14R621	LO AMPTD	7	Adjusts the amplitude of the first LO by changing the reference voltage for the leveling loop.
A14R628	GATE BIAS	7	Adjusts the gate bias for the A7 LO Distribution Amplifier.
A15C100	SMPL MATCH 1	5	Transforms the sampler input impedance to 50Ω over the 280 to 298 MHz range.
A15C210	VCO RANGE	5	Adjusts the VCO tank capacitance so that 21 V on the VCO tune line equals 298 MHz VCO frequency.
A15C629	298 MHz ADJ	17	Fine adjusts the 298 MHz SIG ID Oscillator frequency to optimize its performance.
A15R237	SMPL PWR ADJ	5	Adjusts the signal power level to the Sampler.
A15U302	10 MHz ADJ	11	Adjusts frequency of the temperature compensated crystal oscillator (TCXO) to 10 MHz.
A15R453	PHASE DET BIAS	5	Adjusts bias at pin 3 of phase detector U408 to 1.80 V.

Table 2-2. Adjustable Components (3 of 3)

Reference Designator	Adjustment Name	Adjustment Number	Description
A15R561	CAL AMPTD	10	Adjusts amplitude of the 300 MHz calibrator signal to −10.0 dBm.
A15R926	EXT BIAS ZERO	14	Adjusts zero bias point of external mixer bias.
A16R32	CAL OSC AMPTD	4	Sets calibration oscillator output power (nominally −35 dBm). This power is injected into the IF during the AUTO IF ADJUST routines.
A17R4	Z GAIN	2	Adjusts maximum intensity.
A17R11	CUTOFF	2	Adjusts intensity to turn off blanked lines.
A17R21	Z FOCUS	2	Adjusts focus for lines of different brightness.
A17R26	X FOCUS	2	Adjusts focus at the left and right corners of the display.
A17R34	COARSE FOCUS	2	Adjusts focus at the center of the display.
A17R55	X GAIN	2	Adjusts the horizontal-deflection amplifier gain.
A17R57	X POSN	2	Adjusts the CRT horizontal position.
A17R75	Y GAIN	2	Adjusts the vertical-deflection amplifier gain.
A17R77	Y POSN	2	Adjusts the CRT vertical position.
A17R90	TRACE ALIGN	2	Adjusts the display axis rotation.
A17R92	DDD	2	Adjusts focus of the center of the display.
A17R93	ASTIG	2	Adjusts for the spot roundness on the CRT display.

Table 2-3. Factory Selected Components

Reference Designator	Adjustment Number	Basis of Selection
A5C204	3	Selected to optimize center frequency of LC tank that loads the crystal.
A5C216	3	Selected to optimize center frequency of LC tank that loads the crystal.
A5C326	3	Selected to optimize LC pole center frequency.
A5C327	3	Selected to optimize LC pole center frequency.
A5C505	3	Selected to optimize center frequency of LC tank that loads the crystal.
A5C516	3	Selected to optimize center frequency of LC tank that loads the crystal.
A5C717	3	Selected to optimize LC pole center frequency.
A5C718	3	Selected to optimize LC pole center frequency.
A15U802	16	Selected to set the gain of the second IF to 12 dB.

Table 2-4. Required Test Equipment for TAM

Adjustment	Equipment Used	Required Model	Recommended Model
1 IF Bandpass, LC Poles	None		
2 IF Bandpass, Crystal Poles	None		
3 IF Amplitude	Synthesizer/Level Generator	HP 3335A	
	Test Cable (SMB to BNC)		HP part number 85680-60093
4 Sampling Oscillator	Manual Probe Cable		
5 YTO	Frequency Counter (3–6.8 GHz)		HP 5342A, HP 5343A
6 LO Distribution Amplifier	Power Meter		HP 8902A, HP 436A, HP438A
	Power Sensor (3–6.8 GHz, 10–20 dBm)		HP 8485A
7 Dual Band Mixer	Manual Probe Cable		
8 Low Band Flatness	Source (10 MHz to 2.9 GHz)		HP 8340A
	Power Meter		HP 8902A, HP 436A, HP 438A
	Power Sensor (10 MHz to 2.9 GHz)		HP 8482A, HP 8481A
	Power Splitter (10 MHz to 2.9 GHz)		HP 11667B
9 High Band Flatness and YTF	Source (2.8–18/22 GHz)		HP 8340A
	Power Meter		HP 8902A, HP 436A, HP 438A
	Power Sensor (2.8–18/22 GHz) *(Option 026 2.8–26.5 GHz)*		HP 8485A
	Power Splitter (2.8–18/22 GHz) *(Option 026 2.8–26.5 GHz)*		HP 11667B
10 Calibrator Amplitude	Power Meter		HP 8902A, HP 436A, HP 438A
	Power Sensor	HP 8482A, HP 8481A	
11 10 MHz Reference Oscillator	Frequency Counter (9–11 MHz)		HP 5342A, HP 5343A
12 External Mixer Bias	Manual Probe Cable		
13 External Mixer Amplitude	Power Meter		HP 8902A, HP 436A, HP 438A
	Power Sensor (310.7 MHz,–25 to –35 dBm)		HP 8484A

1. High-Voltage Power Supply

Assembly Adjusted

A6 Power Supply

Related Performance Test

There is no related performance test for this adjustment.

Description

The high-voltage power supply is adjusted to the voltage marked on the A6A1 HV Module. The A6A1 HV Module is characterized in the factory to ensure that the display filament voltage is set to 6.0 V rms when the +110 V dc (nominal) supply is set to the voltage marked on the HV Module.

Warning **To minimize shock hazard, use a nonmetallic adjustment tool when adjusting the A6 Power Supply.**

Warning **The following procedure probes voltages that, if contacted, could cause personal injury or death.**

Note Adjustment of the high-voltage power supply should not be a routine maintenance procedure. Any adjustments should be done only if the A6 Power Supply, A6A1 HV Module, or A18 CRT (display) is repaired or replaced.

Note You must perform the display adjustments after this adjustment if either the display or HV Module has been replaced.

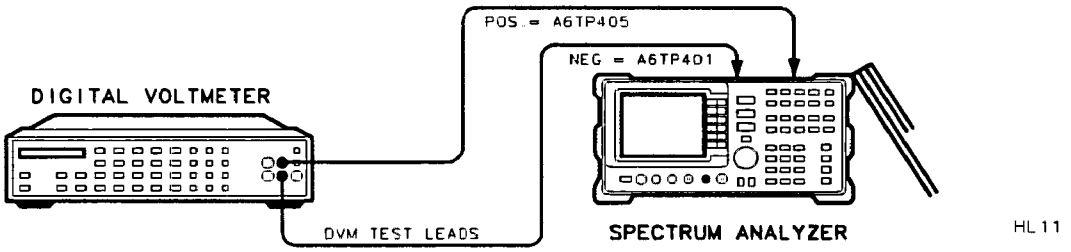

Figure 2-1. High Voltage Power Supply Adjustment Setup

Equipment

Digital Multimeter ..... HP 3456A
DVM Test Leads ..... HP 34118A

Procedure

Warning **After disconnecting the ac power cord, allow capacitors in the high-voltage supply to discharge for at least 30 seconds before removing the protective cover from the A6 Power Supply.**

1. Set the spectrum analyzer (LINE) switch off, disconnect the power cord, and remove the analyzer cover. Fold down the A2 Controller, A3 Interface, A4 Log Amplifier, and A5 IF assemblies. Remove the A6 Power Supply cover.
2. Position the spectrum analyzer as shown in Figure 2-1. Connect the positive DVM lead to A6TP405 and the negative DVM lead to A6TP401.
3. Set the HP 3456A controls as follows:

   FUNCTION ..... DC VOLTS
   RANGE ..... 1000 VOLTS

4. Reconnect the power cord to the spectrum analyzer and set the (LINE) switch on.
5. Record the voltage marked on the A6A1 HV Module.

   Voltage marked on A6A1 HV Module = _____ V dc

6. Adjust A6R410 HV ADJ for a voltage equal to the voltage recorded in step 5.
7. Set the spectrum analyzer (LINE) switch off and disconnect the power cord. Wait at least 30 seconds for the high-voltage power supply capacitors to discharge.
8. Disconnect the DVM test leads from A6TP401 and A6TP405. Reinstall the power supply cover.

2. Display Adjustment

Assembly Adjusted

A2 Controller
A17 CRT Driver

Related Performance Test

Sweep Time Accuracy (Sweep Times <30 ms)

Description

Coarse adjustment of the deflection amplifiers, Z-axis amplifiers, and line generators is done using the CRT adjust pattern. Fine adjustments use the graticule. The fast zero-span amplitude adjustments correct for differences between analog and digital display modes. The displayed sweep time accuracy is adjusted in the fast zero-span sweep adjustments.

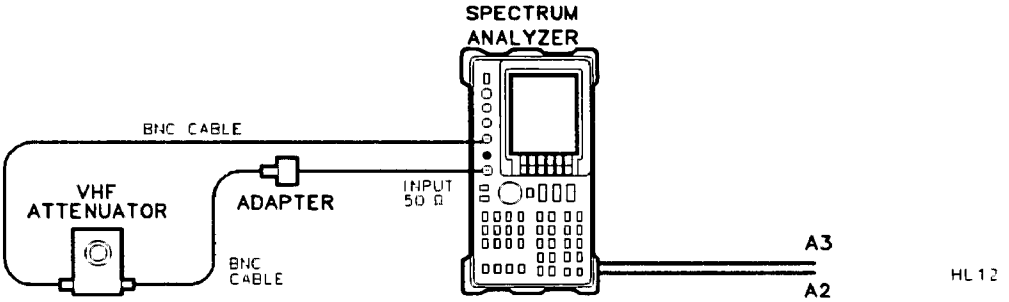

Figure 2-2. Display Adjustment Setup

Equipment

10 dB VHF Step Attenuator ..... HP 355D

Adapters
Type N (m) to BNC (f) 1250-1476
Type N (f) to APC-3.5 (f) 1250-1745
(Option 026 only)

Cable
BNC, 122 cm *(2 required)* ..... HP 10503A

Procedure

1. Set the analyzer's (LINE) switch OFF. Remove the analyzer's cover and fold out the A2 Controller and A3 Interface assemblies as illustrated in Figure 2-2. Connect the CAL OUTPUT to the INPUT.

Preliminary Adjustments

2. Set A17R55 X GAIN, A17R75 Y GAIN, A17R92 DDD, A17R93 ASTIG, A2R206 DGTL X GAIN, A2R215 DGTL Y GAIN, A2R262 STOP BLANK, and A2R263 START BLANK to midrange. Also set the rear-panel X POSN, Y POSN, and TRACE ALIGN to midrange.
3. Set A17R21 Z FOCUS, A17R26 X FOCUS, and A17R11 CUTOFF fully counterclockwise.
4. Set A17R4 Z GAIN fully clockwise.
5. Turn the analyzer on and allow it to warm up for at least 3 minutes. Adjust A17R11 CUTOFF until the display is visible and A17R34 COARSE FOCUS for best possible focus.

Cutoff Adjustment

6. Press (PRESET), (DISPLAY), `INTENSITY`, 255 (ENTER), `STORE INTENSITY`, `MORE 1of2`, `FOCUS`, 127 (ENTER), `STORE FOCUS`, then `GRAT OFF`. Adjust A17R11 CUTOFF until the line between the bottom of trace A and the annunciators at the bottom of the display just disappears.

Deflection Adjustments

7. Press `GRAT ON`, `MORE 2of2`, `INTENSITY`, 80 (ENTER), `STORE INTENSITY`, (CAL), `MORE 1of2`, and `CRT ADJ PATTERN`. Fold up the A3 Interface assembly.
8. Refer to Figure 2-3 for locating the lines used for adjusting DGTL X GAIN and DGTL Y GAIN. Each of these lines is actually two lines adjusted for coincidence. The two lines will form an "X" if they are not adjusted properly.
9. Adjust A2R206 DGTL X GAIN until the two vertical lines near the left edge of the display appear to be one single line.
10. Adjust A2R215 DGTL Y GAIN until the two horizontal lines near the top edge of the display appear to be one single line.
11. Adjust A2R262 STOP BLANK and A2R263 START BLANK for the sharpest corners of the outer box in the test pattern. The intensity of the corners should be the same as the middle of the lines between the corners.
12. Adjust the rear-panel TRACE ALIGN until the leftmost line of the test pattern is parallel with the CRT bezel. See Figure 2-3.
13. Adjust the rear-panel X POSN and A17R55 X GAIN until the leftmost "@" characters and the softkey labels appear just inside the left and right edges of the CRT bezel.
14. Adjust the rear-panel Y POSN and A17R75 Y GAIN until the softkey labels align with their appropriate softkeys.
15. Press (PRESET). If necessary, readjust STOP BLANK and START BLANK for the best-looking intersection of the graticule lines. This will be most noticeable along the center vertical and horizontal graticule lines.

Intensity Adjustments

16. Press (AMPLITUDE) then set the **REF LVL** to −70 dB and the **LOG dB/DIV** to 1. This should almost completely fill the screen with the noise floor. Press (SGL SWP). Adjust A17R4 Z GAIN until the intensity at the center of the screen is 15 NITs.
17. Press (CAL), **MORE 1of2**, and **CRT ADJ PATTERN**. Locate the dot just below the HP logo. Adjust A17R93 ASTIG for the smallest round dot possible.

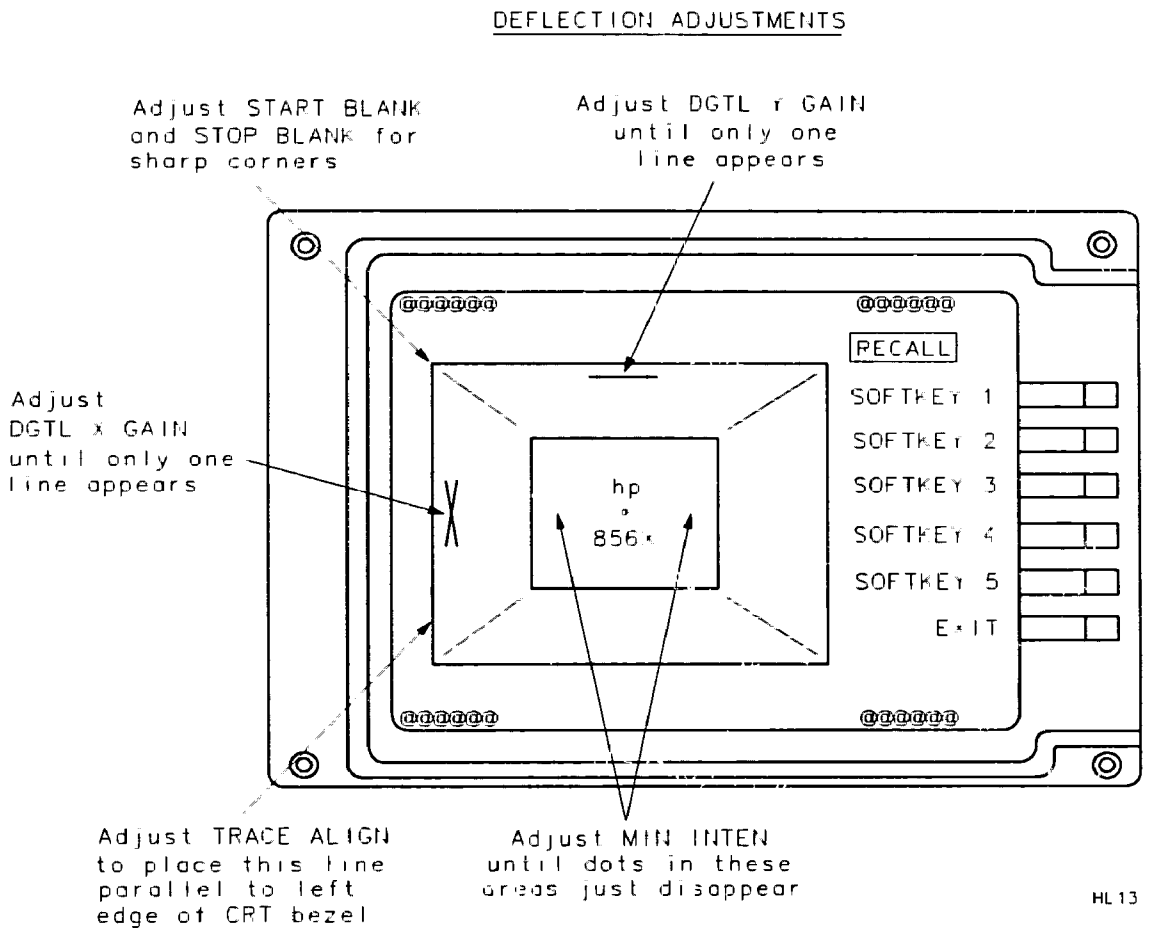

Figure 2-3. CRT Adjust Pattern

18. Adjust A17R34 COURSE FOCUS and A17R92 DDD for the best focus of the characters at the center of the screen.
19. Adjust A17R21 Z FOCUS for the best focus of the test pattern's outside box.
20. Adjust A17R26 X FOCUS for best focus of the "@" characters at the corners of the test pattern.
21. Repeat steps 17 through 20 to obtain the best overall focus quality.

Fast Zero Span Adjustments

22. Set A2R218 VIDEO OFFSET and A2R268 VIDEO GAIN to midrange.
23. Set the HP 355D to 30 dB attenuation.
24. Press (PRESET) on the analyzer, and connect the equipment as shown in Figure 2-2. Set the analyzer's controls as follows:

    CENTER FREQ ..... 300 MHz
    SPAN ..... 0 Hz
    REF LVL ..... −40 dBm
    RES BW ..... 1 kHz
    VIDEO BW ..... 300 Hz

25. Press (MKR), (MKR->), MARKER-> REF LVL. Press (SWEEP) and set the sweep time to 10 ms.
26. Adjust A2R209 SWEEP OFFSET to place the beginning of the trace at the leftmost vertical graticule line.
27. Adjust A2R271 SWEEP GAIN to place the end of the trace at the tenth vertical graticule line (one division from the right edge of the graticule).
28. Press (SAVE), SAVE STATE, and STATE 0.
29. Press (AMPLITUDE) and set reference level to +30 dBm. Press (SAVE), SAVE STATE, STATE 1. Press (SWEEP) and set the sweep time to 50 ms.
30. Press (SAVE), SAVE STATE, and STATE 2.
31. Press (RECALL) and RECALL STATE.
32. Press STATE 2.
33. Note the vertical position of the trace.
34. Press STATE 1.
35. Adjust A2R218 VIDEO OFFSET to position the trace halfway between its original position and the position noted in step 33.
36. Press STATE 0.
37. Adjust A2R268 VIDEO GAIN to position the trace halfway between its original position and the top horizontal graticule line.
38. Repeat steps 32 through 37 until the vertical positions of the trace in STATE 1 and STATE 2 coincide, and the trace aligns with the top horizontal graticule in STATE 0.
39. Press STATE 0.
40. Adjust A2R271 SWEEP GAIN to place the end of the trace at the rightmost vertical graticule line.

Certification

Hewlett-Packard Company certifies that this product met its published specifications at the time of shipment from the factory. Hewlett-Packard further certifies that its calibration measurements are traceable to the United States National Institute of Standards and Technology, to the extent allowed by the Institute's calibration facility, and to the calibration facilities of other International Standards Organization members.

Warranty

This Hewlett-Packard instrument product is warranted against defects in material and workmanship for a period of one year from date of shipment. During the warranty period, Hewlett-Packard Company will, at its option, either repair or replace products which prove to be defective.

For warranty service or repair, this product must be returned to a service facility designated by HP. Buyer shall prepay shipping charges to HP and HP shall pay shipping charges to return the product to Buyer. However, Buyer shall pay all shipping charges, duties, and taxes for products returned to HP from another country.

HP warrants that its software and firmware designated by HP for use with an instrument will execute its programming instructions when properly installed on that instrument. HP does not warrant that the operation of the instrument, or software, or firmware will be uninterrupted or error-free.

Limitation of Warranty

The foregoing warranty shall not apply to defects resulting from improper or inadequate maintenance by Buyer, Buyer-supplied software or interfacing, unauthorized modification or misuse, operation outside of the environmental specifications for the product, or improper site preparation or maintenance.

NO OTHER WARRANTY IS EXPRESSED OR IMPLIED. HP SPECIFICALLY DISCLAIMS THE IMPLIED WARRANTIES OF MERCHANTABILITY AND FITNESS FOR A PARTICULAR PURPOSE.

Exclusive Remedies

THE REMEDIES PROVIDED HEREIN ARE BUYER'S SOLE AND EXCLUSIVE REMEDIES. HP SHALL NOT BE LIABLE FOR ANY DIRECT, INDIRECT, SPECIAL, INCIDENTAL, OR CONSEQUENTIAL DAMAGES, WHETHER BASED ON CONTRACT, TORT, OR ANY OTHER LEGAL THEORY.

Assistance

Product maintenance agreements and other customer assistance agreements are available for Hewlett-Packard products.

For any assistance, contact your nearest Hewlett-Packard Sales and Service Office.

Safety Symbols

The following safety symbols are used throughout this manual. Familiarize yourself with each of the symbols and its meaning before operating this instrument.

Caution

The *caution* sign denotes a hazard. It calls attention to a procedure which, if not correctly performed or adhered to, could result in damage to or destruction of the instrument. Do not proceed beyond a *caution* sign until the indicated conditions are fully understood and met.

Warning

The *warning* sign denotes a hazard. It calls attention to a procedure which, if not correctly performed or adhered to, could result in injury or loss of life. Do not proceed beyond a *warning* sign until the indicated conditions are fully understood and met.

General Safety Considerations

Warning

***Before this instrument is switched on*, make sure it has been properly grounded through the protective conductor of the ac power cable to a socket outlet provided with protective earth contact.**

Any interruption of the protective (grounding) conductor, inside or outside the instrument, or disconnection of the protective earth terminal can result in personal injury.

Warning

There are many points in the instrument which can, if contacted, cause personal injury. Be extremely careful.

Any adjustments or service procedures that require operation of the instrument with protective covers removed should be performed only by trained service personnel.

Caution

Before this instrument is switched on, make sure its primary power circuitry has been adapted to the voltage of the ac power source.

Failure to set the ac power input to the correct voltage could cause damage to the instrument when the ac power cable is plugged in.

HP 8562A/B Documentation Outline

For ordering information, contact a Hewlett-Packard Sales and Service Office.

Manuals Shipped with Your Instrument

HP 8562A/B Installation and Verification Manual

Tells you how to install the spectrum analyzer.
Tells you what your spectrum analyzer's specifications are.

HP 8562A/B Operation and Programming Manual

Describes spectrum analyzer features.
Tells you how to make measurements with your spectrum analyzer.
Tells you how to program your spectrum analyzer.

HP 8562A/B Operation Verification Software Manual

Tells you how to use your Operation Verification Software.

HP 8562A/B Quick Reference Guide

Is an abbreviated version of the *HP 8562A/B Operation and Programming Manual.*
Provides you with a listing of all remote programming commands.

Options

These manuals can be ordered either by the instrument options listed below or by the manual's individual part number. Contact a Hewlett-Packard Sales and Service Office for current part numbers.

Option 915

HP 8562A/B Service Manual

Provides information to service your spectrum analyzer to the assembly-level (not always immediately available for new products).

HP 8562A/B Component-Level Information

Provides component-level information for component-level repair of the spectrum analyzer or spectrum analyzer family (not always immediately available for new products).

Option 910

Extra Manual Set

Doubles all documentation shipped with a standard instrument.

Option 916

Quick Reference Guide

Adds an extra Quick Reference Guide to the document package.

Contents

1. General Information

Manual Organization 1-1
Manual Conventions 1-2
Instruments Covered by Manual 1-2
  Serial Numbers 1-2
  Manual Backdating Changes 1-2
Instrument Variations 1-3
HP 85629A/B Tests and Adjustments Module 1-4
Service Kit 1-4
Recommended Test Equipment 1-5
Electrostatic Discharge Information 1-5
  Reducing ESD Damage 1-5
    PC Board Assemblies, Microcircuits and Electronic Components 1-5
    Test Equipment 1-5
Sales and Service Offices 1-8
Returning Instruments for Service 1-8
  Service Tag 1-8
  Original Packaging 1-8
  Other Packaging 1-8

2. Adjustment Procedures

Introduction 2-1
  Safety Considerations 2-2
  Which Adjustments Should Be Performed? 2-2
  Test Equipment 2-2
  Adjustable and Factory-Selected Components 2-2
  Adjustment Tools 2-3
  Instrument Service Position 2-3
Using the TAM 2-9
  Test Equipment 2-9
  Adjustment Indicator 2-9
1. High-Voltage Power Supply 2-12
2. Display Adjustment 2-14
3. IF Bandpass Adjustment 2-19
4. IF Amplitude Adjustment 2-24
5. Sampling Oscillator Adjustment 2-28
6. YTO Adjustment 2-33
7. 1ST LO Distribution Amplifier Adjustment 2-35
8. Dual Band Mixer Bias Adjustment 2-37
9. YTF Adjustment (HP 8562A) 2-39
10. Frequency Response Adjustment 2-41
11. Calibrator Amplitude Adjustment 2-44

12. 10 MHz Frequency Reference Adjustment 2-46
13. Demodulator Adjustment 2-48
14. External Mixer Bias Adjustment 2-51
15. External Mixer Amplitude Adjustment 2-53
16. Second IF Gain Adjustment 2-57
17. SIG ID Oscillator Adjustment 2-59
18. 10 MHz Reference Adjustment (Option 003) 2-62

3. Assembly Replacement
Access to Internal Assemblies 3-2
Cable Color Code 3-2
Procedure 1. Analyzer Cover 3-3
Procedure 2. A1 Front Frame/A18 CRT 3-4
Procedure 3. A1A1 Keyboard/Front Panel Keys 3-10
Procedure 4. A1A2 RPG 3-12
Procedure 5. A2, A3, A4, and A5 Assemblies 3-13
Procedure 6. A6 Power Supply 3-18
Procedure 7. A6A1 High Voltage Assembly 3-21
Procedure 8. A7 through A13 Assemblies 3-24
A7 1st LO Distribution Amplifier 3-27
A8 Dual Mixer 3-28
A9 Input Attenuator 3-29
A10 YTF (HP 8562A) 3-30
A11 YTO 3-32
A12 RF Switch 3-33
A13 Second Converter 3-34
Procedure 9. A14 and A15 Assemblies 3-35
Procedure 10. A16 CAL Oscillator/A17 CRT Driver 3-38
Procedure 11. B1 Fan 3-40
Procedure 12. BT1 Battery 3-41
Procedure 13. Rear Frame/Rear Dress Panel 3-42
Procedure 14. W3 Line Switch Cable 3-45
Procedure 15. EEROM (A2U501) 3-51
Procedure 16. A21 OCXO (Option 003) 3-52

4. Replaceable Parts
Ordering Information 4-1
Direct Phone-Order System 4-1
Parts List Format 4-2
Firmware-Dependent Part Numbers 4-3

5. Major Assembly and Cable Locations
Introduction 5-1

6. Manual Backdating
How to Use This Backdating Information 6-1

7. General Troubleshooting
Introduction 7-1
Assembly Level Text 7-1
Block Diagrams 7-1
Assembly Test Points 7-2
Pad 7-2
Test Jack 7-2
Ribbon Cables 7-2
Troubleshooting to a Functional Section 7-6
Using the TAM 7-8
Diagnostic Functions 7-8
TAM Requirements 7-9
Test Connectors 7-9
Revision Connectors 7-9
Inconsistent Results 7-9
Erroneous Results 7-10
Blank Display 7-10
Automatic Fault Isolation 7-10
Display/Power Supply 7-10
Controller Check 7-10
ADC/Interface Check 7-10
IF/LOG Check 7-11
LO Control Check 7-11
RF Low Band Check 7-11
Manual Probe Troubleshooting 7-11
RF Path Fault Isolation 7-12
Cal Osc. Troubleshooting 7-12
Error Messages 7-13
Viewing Multiple Messages 7-14
Error Message Elimination 7-14
Remote HP-IB Errors (100 to 150) 7-14
System Errors (200 to 201) 7-15
ADC Errors (250 to 251) 7-16
YTO Loop Errors (300 to 301) 7-16
Roller PLL Errors (302 to 316) 7-16
YTO Loop Errors (317 to 318) 7-18
Roller Oscillator Errors (321 to 329) 7-18
YTO Loop Errors (331) 7-19
600 MHz Reference Loop (333) 7-20
YTO Leveling Loop (334) 7-20
Sampling Oscillator (335) 7-20
Automatic IF Errors (400 to 599) 7-20
7-106ADC Errors (600 to 651) 7-27
EEROM Checksum Errors (700 to 704) 7-27
Program ROM Checksum Errors (705 to 710) 7-28
RAM Check Errors (711 to 716) 7-28
Microprocessor Error (717) 7-29
Battery Problem (718) 7-29

System Errors (750 to 755) 7-29
Module Errors (800 to 899) 7-29
Option 003 (OCXO) Errors (905 to 907) 7-29
Block Diagram Description 7-30
RF Section 7-31
A7 LODA 7-31
A9 Input Attenuator 7-31
A12 RF Switch 7-31
A8 Dual Mixer 7-32
A10 YTF (HP 8562A) 7-32
AT1 (HP 8562B) 7-32
A13 Second Converter 7-32
A15A1 Second IF Distribution Amplifier (P/O A15) 7-32
Third Converter (P/O A15) 7-32
Flatness Compensation Amplifiers (P/O A15) 7-33
Synthesizer Section 7-33
Sweeping the First LO 7-33
Reference PLL (P/O A15) 7-34
YTO PLL (A7, A11, P/O A14, P/O A15) 7-34
Offset PLL (P/O A15) 7-34
Roller Oscillator PLL (P/O A14) 7-34
A7 LODA 7-35
A11 YTO 7-35
IF Section 7-35
A4 LOG Amplifier Assembly 7-35
A5 IF Assembly 7-35
A16 Cal. Oscillator 7-36
ADC/Interface Section 7-36
ADC 7-36
Log Expand/Video Functions (P/O A3) 7-36
Triggering 7-37
Controller Section 7-37
EEROM 7-37
Firmware 7-37
Display/Power Supply Section 7-38
A6 Power Supply 7-38
A17 CRT Display Driver 7-38

8. ADC/Interface Section
Troubleshooting Using the TAM 8-4
Automatic Fault Isolation 8-4
Keyboard/RPG Problems 8-7
Keyboard Interface 8-7
RPG Interface 8-8
Triggering Problems 8-10
Preselector Peaking Control (Real Time DAC) 8-11
Band Flatness Control (RF Gain DACs) 8-12
A3 Assembly's Video Circuits 8-13
Log Offset/Log Expand 8-14
Video MUX 8-15
Video Filter 8-16

Video Filter Buffer Amplifier 8-17
Positive/Negative Peak Detectors 8-17
Peak Detector Reset 8-18
Rosenfell Detector 8-19
ADC MUX 8-20
Variable Gain Amplifier (VGA) 8-21
Track and Hold 8-21
A3 Assembly's ADC Circuits 8-22
ADC Control Signals 8-22
ADC Start/Stop Control 8-23
ADC ASM 8-24
ADC 8-24
Ramp Counter 8-25
A3 Assembly's Control Circuits 8-26
Analog Bus Drivers 8-26
Analog Bus Timing 8-27
Interface Strobe Select 8-28

9. IF Section
Troubleshooting Using the TAM 9-3
Troubleshooting A4 with the TAM 9-4
Troubleshooting A5 with the TAM 9-4
Troubleshooting A16 with the TAM 9-8
Automatic IF Adjustment 9-9
Parameters Adjusted 9-10
Requirements 9-11
Performance Test Failures 9-11
IF Gain Uncertainty Performance Test 9-11
Scale Fidelity Performance Test 9-12
Resolution Bandwidths Performance Tests 9-12
A4 Log Amplifier Assembly 9-13
Log Amplifier 9-13
Linear Amplifiers 9-14
Detector 9-15
Buffer Amplifier 9-15
Video Offset 9-16
Video Buffer Amplifier 9-16
Video Output 9-16
Frequency Counter Prescaler/Conditioner 9-17
AM/FM Demodulator 9-17
A5 IF Assembly 9-18
IF Signature 9-19
Common IF Signature Problems 9-23
1 MHz Resolution BW Problems 9-25
30 kHz Resolution BW Problems 9-27
3 kHz and 10 kHz Resolution BW Problems 9-27
100 Hz Resolution BW Problems 9-27
Step Gains 9-28
A16 Cal Oscillator Assembly 9-29
Cal Oscillator Unlock at Beginning of IF Adjust 9-30
Inadequate CAL OSC AMPTD Range (A16R32) 9-30

100 Hz to 3 kHz RES BW Out of Specification 9-31
Low Pass Filter 9-35
Sweep Generator 9-35
AM/FM Demodulation, Audio Amplifier, and Speaker 9-36

10. Controller Section
Troubleshooting Using the TAM 10-2
Blank Display 10-2
Digital Signature Analysis (DSA) 10-4
Display Problems 10-4
Line Generators 10-4
Blanking 10-5
Display Jumbled or Trace Off Screen 10-7
Intensity 10-9
Bad Characters or Graticule 10-10
Long Lines Dimmer Than Short Lines 10-10
Analog Zero-Span Problems 10-12
Frequency-Count Marker Problems 10-13
Frequency Counter 10-13
State and Trace Storage Problems 10-14
Keyboard Problems 10-15

11. Synthesizer Section
Confirming a Faulty Synthesizer Section 11-2
Troubleshooting Test Setup 11-7
Troubleshooting Using the TAM 11-8
General PLL Troubleshooting 11-13
PLL Locked at Wrong Frequency 11-13
Unlocked PLL 11-14
Frequency Span Accuracy Problems 11-15
Determining the First-LO Span 11-15
Confirming Span Problems 11-16
YTO Main Coil Span Problems (LO Spans >20 MHz) 11-16
YTO FM Coil Span Problems (LO Spans 1.01 MHz to 20 MHz) 11-17
Roller Oscillator Span Problems (LO Spans ≤1 MHz) 11-18
First-LO Span Problems (All Spans) 11-21
First-LO Span Problems (Multiband Sweeps) 11-22
Unlocked YTO PLL 11-23
Operation 11-23
Troubleshooting an Unlocked YTO PLL 11-25
Unlocked Roller Oscillator PLL 11-31
Operation 11-31
Confirming an Unlocked Condition 11-31
Offset Oscillator PLL 11-32
Transfer Oscillator PLL 11-34
Main Oscillator PLL 11-35
Unlocked Offset PLL (Sampling Oscillator) 11-37
Operation 11-37
Troubleshooting 11-37
Unlocked Reference PLL 11-40
Operation 11-40

Troubleshooting 11-40
Third LO Driver Amplifier 11-42
Sampler and Sampler IF 11-43
Sweep Generator Circuit 11-44

12. RF Section
Troubleshooting Using the TAM 12-2
Low Band Problems (1 kHz to 2.9 GHz) 12-4
High Band Problems (2.75 GHz to 22 GHz) 12-5
Low and High Band Problems 12-5
A7 LODA (LO Distribution Amplifier) 12-6
A8 Dual Band Mixer 12-7
PIN Switch 12-7
High Band Bias 12-7
A9 Input Attenuator 12-8
A12 RF Switch 12-9
A13 Second Converter 12-10
A14 Frequency Control Assembly 12-12
A7 LODA Drive 12-12
Control Latch for Band-Switch Driver 12-13
YTF Driver Circuit 12-13
A15 RF Assembly 12-16
Confirming a Faulty Third Converter 12-16
Confirming Third Converter Output 12-17
Third Converter 12-17
Flatness Compensation Control 12-18
Control Latches 12-19
SIG ID Oscillator 12-19
10 MHz Reference 12-20

13. Display/Power Supply Section
Troubleshooting Using the TAM 13-4
Blank Display 13-5
Blank Display 13-6
Display Distortion 13-7
Focus Problems 13-8
Intensity Problems 13-9
A6 Power Supply Assembly 13-11
Dead Power Supply 13-11
Line Fuse Blowing 13-13
Supply Restarting Every 1.5 Seconds (Kick Start) 13-13
Low Voltage Supplies 13-13
High Voltage Supplies 13-14
CRT Supply Dropping Out 13-15
Blanking Signal 13-15
Buck Regulator Control 13-16
DC-DC Converter Control 13-16
Power Up 13-16

A. Component-Level Information Packets

Figures

1-1. Typical Serial Number Label 1-2
1-2. Example of a Static-Safe Work Station 1-6
1-3. HP 8562A/B Shipping Container and Contents 1-9
2-1. High Voltage Power Supply Adjustment Setup 2-13
2-2. Display Adjustment Setup 2-14
2-3. CRT Adjust Pattern 2-16
2-4. IF Bandpass Adjustment 2-19
2-5. IF Amplitude Adjustment Setup 2-24
2-6. Sampler Adjustment Setup 2-28
2-7. Coarse-Tune Adjustment Setup 2-28
2-8. YTO Adjustment Setup 2-33
2-9. 1st LO Distribution Amplifier Adjustment Setup 2-35
2-10. Dual Band Mixer Bias Adjustment Setup 2-37
2-11. YTF Adjustment Setup 2-39
2-12. Frequency Response Adjustment Setup 2-41
2-13. Calibrator Amplitude Adjustment Setup 2-44
2-14. 10 MHz Frequency Reference Adjustment Setup 2-46
2-15. Demodulator Adjustment Setup 2-48
2-16. External Mixer Bias Adjustment Setup 2-51
2-17. External Mixer Amplitude Adjustment Setup 2-53
2-18. Location of A15A1 2-58
2-19. Signal ID Oscillator Adjustment Setup 2-60
2-20. 10 MHz Reference Adjustment (Option 003) Setup 2-63
3-1. Hinged Assemblies 3-3
3-2. Grounding the Post-Accelerator Cable 3-5
3-3. A9, A18, and Line-Switch Assembly Mounting Screws 3-6
3-4. Front-Frame Mounting Screws 3-7
3-5. Installing the CRT and Front-Frame Assemblies 3-7
3-6. Placing the CRT into the Front Frame 3-8
3-7. Key Positions As Viewed from Inside 3-11
3-8. A2, A3, A4, and A5 Assembly Removal 3-14
3-9. Assembly Cables 3-15
3-10. Coaxial Cable Clip 3-16
3-11. HP-IB and A1A1 W1 Cable Placement 3-17
3-12. A6 Power Supply Connections 3-19
3-13. A6 Power Supply Cover 3-20
3-14. A17 CRT Driver Mounting Screws 3-22
3-15. A16 Cable Routing 3-23
3-16. Assembly Locations 3-25
3-17. RF Section Bias Connections 3-26
3-18. A9 Mounting Screws at Right Frame 3-29
3-19. A10 Mounting Screws 3-30

3-20. A12 Mounting Bracket 3-33
3-21. A14 and A15 Assembly Removal 3-35
3-22. A14 and A15 Assembly Cables 3-37
3-23. A16 and A17 Mounting Screws 3-38
3-24. A16 Cable Routing 3-39
3-25. Main Deck Screws 3-43
3-26. A6 Power-Supply Cover 3-44
3-27. W3 Dress and Connection to A6 Power Supply 3-46
3-28. Line Switch Mounting Screw and Cable Dress 3-47
3-29. W3 Cable Connector 3-48
3-30. Side Frame Mounting Screws 3-50
3-31. A21 OCXO Mounting Screws 3-52
4-1. Parts Identification, Assembly Mounting 4-18
4-2. Parts Identification, Cover Assembly 4-21
4-3. Parts Identification, Main Chassis 4-25
4-4. Parts Identification, RF Section 4-29
4-5. Parts Identification, Front Frame 4-33
4-6. Parts Identification, Rear Frame 4-37
5-1. Hinged Assemblies 5-4
5-2. Top View (A2 Unfolded) 5-4
5-3. Top View (A2 and A3 Unfolded) 5-5
5-4. Top View (A2, A3, A4, and A5 Unfolded) 5-6
5-5. Bottom View (A15 Unfolded) 5-7
5-6. Bottom View (A15 and A14 Unfolded) 5-8
5-7. Front End 5-9
5-8. Rear View 5-9
7-1. Assembly Test Points 7-3
7-2. Ribbon Cable Connections 7-4
7-3. Functional Sections 7-30
7-4. Phase Lock Loops 7-33
7-5. Simplified Block Diagram 7-39
7-6. HP Model 8562A/B Overall Block Diagram 7-41
8-1. A3 Test Connectors 8-4
8-2. A3 Interface Assembly Block Diagram 8-29
9-1. A4, A5, and A16 Test Connectors 9-3
9-2. IF Section Troubleshooting with TAM 9-7
9-3. IF Adjust Signature 9-20
9-4. Detailed IF Adjust Signature (1) 9-20
9-5. Detailed IF Adjust Signature (2) 9-21
9-6. Detailed IF Adjust Signature (3) 9-21
9-7. Detailed IF Adjust Signature (4) 9-22
9-8. Detailed IF Adjust Signature (5) 9-22
9-9. Noisy Signature 9-23
9-10. Noise with Correct Shape 9-24
9-11. Region B Amplitude Variation 9-24
9-12. Region B Amplitude Offset 9-25
9-13. Faulty Crystal Short 9-26
9-14. Faulty LC Pole 9-26
9-15. Faulty Crystal Symmetry 9-28
9-16. Output Waveform, 10 kHz RBW 9-32
9-17. Output Waveform, 3 kHz RBW 9-33

9-18. Output Waveform, 1 kHz RBW 9-34
9-19. Output Waveform, 300 Hz RBW 9-34
9-20. Failed Crystal Set Symptoms 9-35
9-21. A4 Log Amplifier Block Diagram 9-37
9-22. A5 IF Assembly Block Diagram 9-39
9-23. A16 CAL Oscillator Block Diagram 9-41
10-1. A2 Test Connectors 10-3
10-2. Line Generator Output Waveforms 10-5
10-3. Blanking Waveforms 10-6
10-4. Expanded Blanking Waveforms 10-6
10-5. Switch Driver Waveform LCHAR 10-7
10-6. Distorted X/Y Line Generator Waveforms 10-8
10-7. Expanded X/Y Line Generator Waveforms 10-9
10-8. Normal X/Y Line Generator Waveforms 10-9
10-9. Delta X Waveform 10-11
10-10. Delta Y Waveform 10-11
10-11. DEF1 Synchronization 10-12
10-12. A2 Controller Block Diagram 10-17
11-1. YTO Loop Test Setup 11-5
11-2. Sampler and Sampling Oscillator Test Setup 11-6
11-3. A14 and A15 Test Connectors 11-8
11-4. PLL Locked at Wrong Frequency 11-13
11-5. Unlocked PLL 11-14
11-6. Input to YTO FM Coil Driver 11-18
11-7. Input to Main/FM/VCO Sweep Switch 11-19
11-8. Sweep and Scan Ramps 11-22
11-9. Troubleshooting an Unlocked YTO PLL 11-25
11-10. Simplified Sweep Generator 11-45
11-11. Simplified Sweep Generator During Retrace 11-45
11-12. Simplified Synthesizer Section 11-46
11-13. Simplified A14 Assembly Block Diagram 11-47
11-14. Simplified A15 Assembly Block Diagram 11-48
11-15. Frequency Control Block Diagram 11-49
11-16. RF Assembly Block Diagram 11-51
12-1. A14 and A15 Test Connectors 12-2
12-2. A7 LODA Drive 12-13
12-3. Rear-Panel SWP Output 12-14
12-4. Signal at A14J15 Pin 1 12-15
12-5. 10 MHz Reference at A15J302 12-21
12-6. 10 MHz TTL Reference at U301 Pin 9 12-21
12-7. RF Section, Troubleshooting Block Diagram 12-22
13-1. Simplified Section Block Diagram 13-2
13-2. A17 Test Connector 13-5
13-3. Probe Power Socket 13-7
13-4. Buck Regulator Waveform 13-12
13-5. A6 Power Supply Block Diagram 13-17
13-6. A17 CRT Driver Block Diagram 13-19
A-1. HP 8562A/B Interconnect Block Diagram: 08562-90016 . . . . . A-7

Tables

1-1. Service Kit Contents 1-4
1-2. Static-Safe Accessories 1-7
1-3. Hewlett-Packard Sales and Service Offices 1-10
1-4. Recommended Test Equipment 1-11
2-1. Related Adjustments 2-4
2-2. Adjustable Components 2-6
2-3. Factory Selected Components 2-8
2-4. TAM Adjustments 2-10
2-5. Required Test Equipment for TAM 2-11
2-6. Factory-Selected LC Filter Capacitors 2-21
2-7. LC Factory-Selected Capacitor Selection 2-21
2-8. Factory-Selected XTAL Filter Capacitors 2-22
2-9. XTAL Factory-Selected Capacitor Selection 2-22
2-10. Capacitor Part Numbers 2-23
2-11. Sampling Adjustments 2-32
2-12. A8 Bias Voltages 2-38
2-13. Conversion Loss Data 2-55
2-14. A15U802 Values 2-58
3-1. Required Tools 3-2
4-1. Firmware-Dependent Part Numbers 4-3
4-2. Reference Designations, Abbreviations, and Multipliers 4-4
4-3. Manufacturers Code List 4-7
4-4. Replaceable Parts 4-10
6-1. Serial Prefix vs. Change Paragraphs 6-2
6-2. Affected HP 8562A/B Assemblies 6-3
7-1. Location of Assembly Troubleshooting Text 7-7
8-1. W2 Control Cable Connections 8-2
8-2. Automatic Fault Isolation References 8-5
8-3. TAM Tests Versus A3 Test Connectors 8-6
8-4. Keyboard Matrix 8-7
8-5. Counter Frequencies 8-9
8-6. Trigger MUX Truth Table 8-10
8-7. A3U102 Latch Outputs 8-17
8-8. HMUX_SELO/1 Versus Detector Mode 8-19
8-9. Logic Levels at A3U108 8-20
8-10. Demultiplexer A3U410 Truth Table 8-28
8-11. Demultiplexer A3U500 Truth Table 8-28
9-1. Automatic Fault Isolation References 9-3
9-2. TAM Tests Versus Test Connectors 9-5
9-3. Sweep Width Settings 9-9
9-4. Availalbe Reference Level Range 9-11
9-5. Signal Level for Reference Level Display 9-12
10-1. TAM Tests Versus Test Connectors 10-2

10-2. Gate Times 10-14
11-1. Center Frequency Tuning Values 11-3
11-2. Sampling Oscillator Test Frequencies 11-7
11-3. YTO Frequency in TEST Position 11-8
11-4. Automatic Fault Isolation References 11-9
11-5. TAM Tests versus Test Connectors 11-11
11-6. Sweep Signal Destination versus Span 11-15
11-7. Harmonic Mixing Number versus Center Frequency 11-16
11-8. Settings of Sweep Switches 11-17
11-9. Settings of Sweep Switches 11-19
11-10. Settings for Switches and Comparators 11-22
11-11. Amplifier Polarities 11-24
11-12. YTO Frequency Errors with A14J23 on Pins 2 and 3 11-27
11-13. Voltages in FM Coil and Main Loop Drivers 11-29
11-14. Main Coil Coarse and Fine DACs Voltages 11-30
11-15. Sampling Oscillator PLL Divide Ratios 11-38
12-1. Automatic Fault Isolation References 12-3
12-2. TAM Tests versus Test Connectors 12-4
12-3. Attenautor Pin Values 12-9
12-4. Sweep + Tune Multiplier Values 12-15
13-1. W1 Power-Cable Connections 13-3
13-2. Automatic Fault Isolation References 13-4
13-3. TAM Tests versus Test Connectors 13-5
A-1. HP 8562A/B Spectrum Analyzer Documented Assemblies A-2
A-2. RF Boards Shipped with HP 8562A/Bs Serial Prefixed below 3029A A-4

1

General Information

This *HP 8562A/B Spectrum Analyzer Service Manual* contains information required to adjust and service the HP 8562A/B Spectrum Analyzer to the assembly level. For component-level information, refer to the *HP 8562A/B Spectrum Analyzer Component-Level Information* manual.

Manual Organization

Chapter 1, "General Information", contains information about service kit contents, recommended test equipment, returning an instrument for service, and sales and service offices.

Chapter 2, "Adjustment Procedures", contains the necessary adjustment procedures to adjust the instrument properly after repair.

Chapter 3, "Assembly Replacement", contains instructions for removal and replacement of all major assemblies.

Chapter 4, "Replaceable Parts", contains the information necessary to order parts or assemblies for the instrument.

Chapter 5, "Major Assembly and Cable Locations", contains figures identifying all major assemblies and cables.

Chapter 6, "Manual Backdating", contains backdating information to make this manual compatible with earlier instrument configurations.

Chapter 7, "General Troubleshooting", contains instrument-level troubleshooting information and block diagrams.

Chapters 8 through 13 contain troubleshooting information covering the instrument's six functional areas.

Appendix A contains information on component-level information packets, and the HP 8562A/B Interconnect Diagram.

Manual Conventions

The following conventions are used throughout this manual:

Keys located physically on an instrument are represented with bold capitalized print.

(Key)	A boxed name in this typeface represents a key physically located on the instrument.
Softkeys	A boxed word written in this typeface indicates a "softkey," a key whose label is determined by the instrument's firmware.
CRT Text	Text printed in this typeface indicates text displayed on the CRT.

Instruments Covered by Manual

Serial Numbers

Attached to the instrument's rear panel is a mylar serial number label. The serial number is in two parts. The first four digits and letter are the serial number prefix; the last five digits are the suffix (see Figure 1-1). The prefix is the same for all identical instruments; it changes only when a change is made to the instrument. The suffix, however, is assigned sequentially and is different for each instrument.

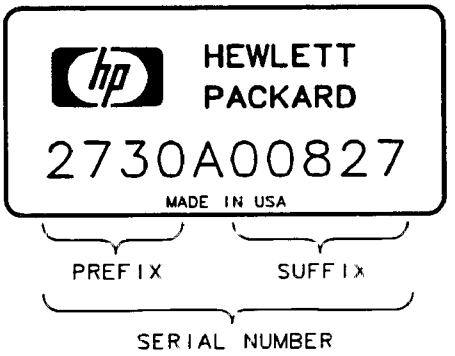

Figure 1-1. Typical Serial Number Label

Manual Backdating Changes

Instuments manufactured before the printing of this manual have been assigned serial number prefixes other than those for which this manual was directly written. Manual backdating information is provided in Chapter 6 to adapt this manual to earlier serial number prefixes.

Instrument Variations

The following text lists the unique assemblies contained in the HP 8562B, HP 8562A/B Option 001, and HP 8562A/B Option 026 instruments with respect to the HP 8562A instrument.

HP 8562B (Unpreselected)

A10 YTF	deleted
W16	deleted
W46	unique part number
W47	deleted
Front dress-panel	unique part number

HP 8562A/B Option 001 (Rear-Panel 2nd IF Output)

A15 RF Assembly	unique part number
W19	added
Rear-panel J10	added

HP 8562A/B Option 003 (Precision Frequency Reference)

A15 RF Assembly	unique part number
A21 OCXO	added
W49	added
W50	added

HP 8562A/B Option 013 (Rear-Panel 2nd IF Output/Precision Frequency Reference)

A15 RF Assembly	unique part number
Rear-Panel J10	added
A21 OCXO	added
W19	added
W49	added
W50	added

HP 8562A Option 026 (1 kHz to 26.5 GHz Frequency Range)

A4 LOG Amplifier Assembly	unique part number
A10 YTF	unique part number
A12 RF Switch	unique part number
W41	unique part number
Spacer for A10	unique part number
Mounting screws for A10	unique part number
Front dress-panel	unique part number

HP 85629A/B Tests and Adjustments Module

When attached to the spectrum analyzer's rear panel, the HP 85629A/B Tests and Adjustments Module (TAM) provides diagnostic functions for supporting the HP 8562A/B. Because the TAM connects directly to the analyzer's internal data and address bus, it controls the analyzer's hardware directly through firmware control. It would be impossible to control the hardware to the same extent either from the analyzer's front panel or over the HP-IB.

The TAM measures voltages at key points in the circuitry and flags a failure whenever the voltage falls outside the limits. The TAM locates the failure to a small functional area which can be examined manually.

Service Kit

The HP 8562A/B Service Kit (HP part number 08562-60021) contains service tools required to repair the instrument. Refer to Table 1-1 for a list of items in the service kit.

Table 1-1. Service Kit Contents

Description	Quantity	HP Part Number
Cable Puller	1	5021-6773
PC Board Prop	1	5021-7459
Line Filter Assembly	1	5061-9032
Line Switch Cable	1	5062-0728
Extender Cable	1	5062-0737
BNC Cable (snap)	2	85680-60093
Connector Extractor Tool Kit	1	8710-1791

Recommended Test Equipment

Equipment required for operation verification, performance tests, adjustments, troubleshooting, and the tests and adjustment module is listed in Table 1-4. Other equipment may be substituted if it meets or exceeds the critical specifications listed in the table. (Refer to the *HP 8562A/B Installation Manual* for the performance tests.)

Electrostatic Discharge Information

Electrostatic discharge (ESD) can damage or destroy electronic components. Therefore, all work performed on assemblies consisting of electronic components should be done at a static-safe work station.

Figure 1-2 shows an example of a static-safe work station. Two types of ESD protection are shown: (1) conductive table mat and wrist strap combination, and (2) conductive floor mat and heel strap combination. The two types *must* be used together to ensure adequate ESD protection. Refer to Table 1-2 for a list of static-safe accessories and their part numbers.

Reducing ESD Damage

Below are suggestions that may help reduce the amount of ESD damage that occurs during testing and servicing instruments.

PC Board Assemblies, Microcircuits, and Electronic Components

- Handle these items at a static-safe work station.
- Store or transport these items in static-shielding containers.

Caution Do not touch the edge-connector contacts or trace surfaces with bare hands. Always handle board assemblies by the edges.

Test Equipment

- Before connecting any coaxial cable to an instrument connector for the first time each day, *momentarily* short the center and outer conductors of the cable together.
- Personnel should be grounded with a resistor-isolated wrist strap before touching the center pin of any connector and before removing any assembly from the instrument.
- Be sure that all instruments are properly earth-grounded to prevent buildup of static charge.

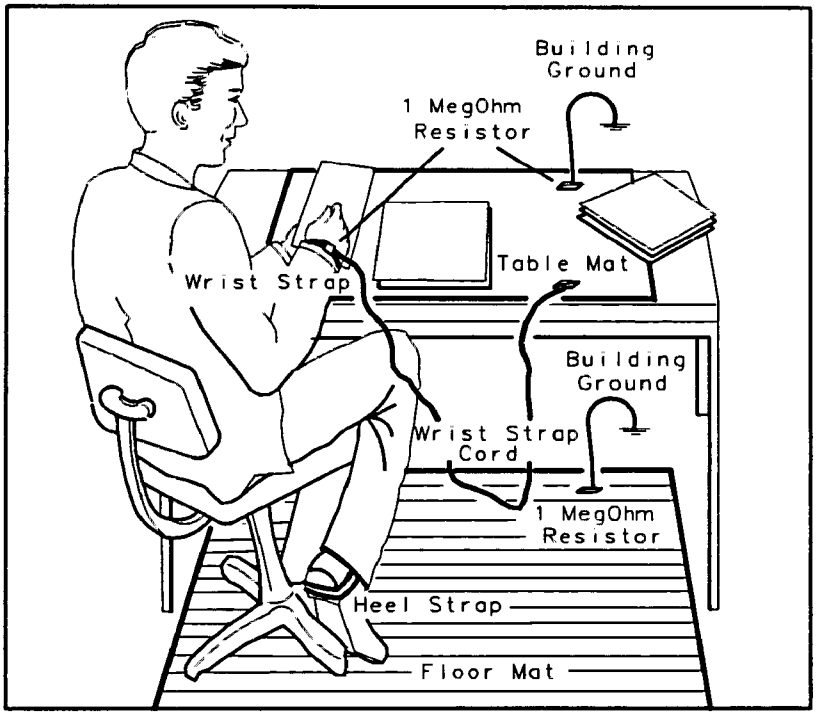

Figure 1-2. Example of a Static-Safe Work Station

Table 1-2. Static-Safe Accessories

Accessory	Description	HP Part Number
Static-control mat and ground wire	Set includes: 3M static-control mat, 0.6m × 1.2m (2 ft × 4 ft) ground wire, 4.6m (15 ft) (The wrist strap and wrist-strap cord are *not* included. They must be ordered separately.)	9300-0797
Wrist-strap cord	1.5m (5 ft)	9300-0980
Wrist strap	Black, stainless steel with four adjustable links and 7-mm post-type connector (The wrist-strap cord is *not* included.)	9300-1383
ESD heel strap	Reusable 6 to 12 months	9300-1169
Shoe ground strap	One-time use only	9300-0793
Hard-surface static-control mat*	Large, black, 1.2m × 1.5m (4 ft × 5 ft) Small, black, 0.9m × 1.2m (3 ft × 4 ft)	92175A 92175C
Soft-surface static-control mat*	Brown, 1.2m × 2.4m (4 ft × 8 ft)	92175B
Tabletop static-control mat*	58 cm × 76 cm (23 in. × 30 in.)	92175T
Anti-static carpet*	Small, 1.2m × 1.8m (4 ft × 6 ft) natural color russet color Large, 1.2m × 2.4m (4 ft × 8 ft) natural color russet color	 92176A 92176C 92176B 92176D

*These accessories can be ordered either through a Hewlett-Packard Sales Office or through HP DIRECT Phone Order Service. In the USA, the HP DIRECT phone number is (800) 538-8787. Contact your nearest Hewlett-Packard Sales Office for more information about HP DIRECT availability in other countries.

Sales and Service Offices

Hewlett-Packard has sales and service offices around the world providing complete support for Hewlett-Packard products. To obtain servicing information, or to order replacement parts, contact the nearest Hewlett-Packard Sales and Service Office listed in Table 1-3.

In any correspondence, be sure to include the pertinent information about model numbers, serial numbers, and/or assembly part numbers.

Note

Within the USA, a toll-free phone number is available for ordering replacement parts. Refer to "Ordering Information" in Chapter 4, "Replaceable Parts," for the phone number and more information.

Returning Instruments for Service

Service Tag

If you are returning the instrument to Hewlett-Packard for servicing, fill in and attach a blue service tag. (Service tags are supplied at the end of the appendix.)

Please be as specific as possible about the nature of the problem. If you have recorded any error messages that appeared on the screen, or have completed a performance test record, or have any other specific data on the performance of the analyzer, please send a copy of this information with the unit.

Original Packaging

Before shipping, pack the unit in the original factory packaging materials if they are available (see Figure 1-3). Original materials are available through any Hewlett-Packard office.

Other Packaging

Caution

Instrument damage can result from using packaging materials other than those specified. Never use styrene pellets as packaging materials. They do not adequately cushion the instrument or prevent it from shifting in the carton. They cause instrument damage by generating static electricity.

You can repackage the instrument with commercially available materials, as follows:

1. Attach a completed service tag to the instrument.
2. Install the front-panel cover on the instrument.
3. Wrap the instrument in antistatic plastic to reduce the possibility of damage caused by ESD.
4. Use a strong shipping container. A double-walled, corrugated cardboard carton of 159 kg (350 lb) bursting strength is adequate. The carton must be large enough and strong

enough to accommodate the instrument. Allow at least 3 to 4 inches on all sides of the instrument for packing material.

5. Surround the instrument with three to four inches of packing material, to protect the instrument and prevent it from moving in the carton. If packing foam is not available, the best alternative is S.D.-240 Air Cap™ from Sealed Air Corporation (Commerce, California 90001). Air Cap looks like a plastic sheet filled with 1-1/4 inch air bubbles. Use the pink (antistatic) Air Cap to reduce static electricity. Wrapping the instrument several times in this material should both protect the instrument and prevent it from moving in the carton.
6. Seal the carton with strong nylon adhesive tape.
7. Mark the carton "Fragile, Handle with Care."
8. Retain copies of all shipping papers.

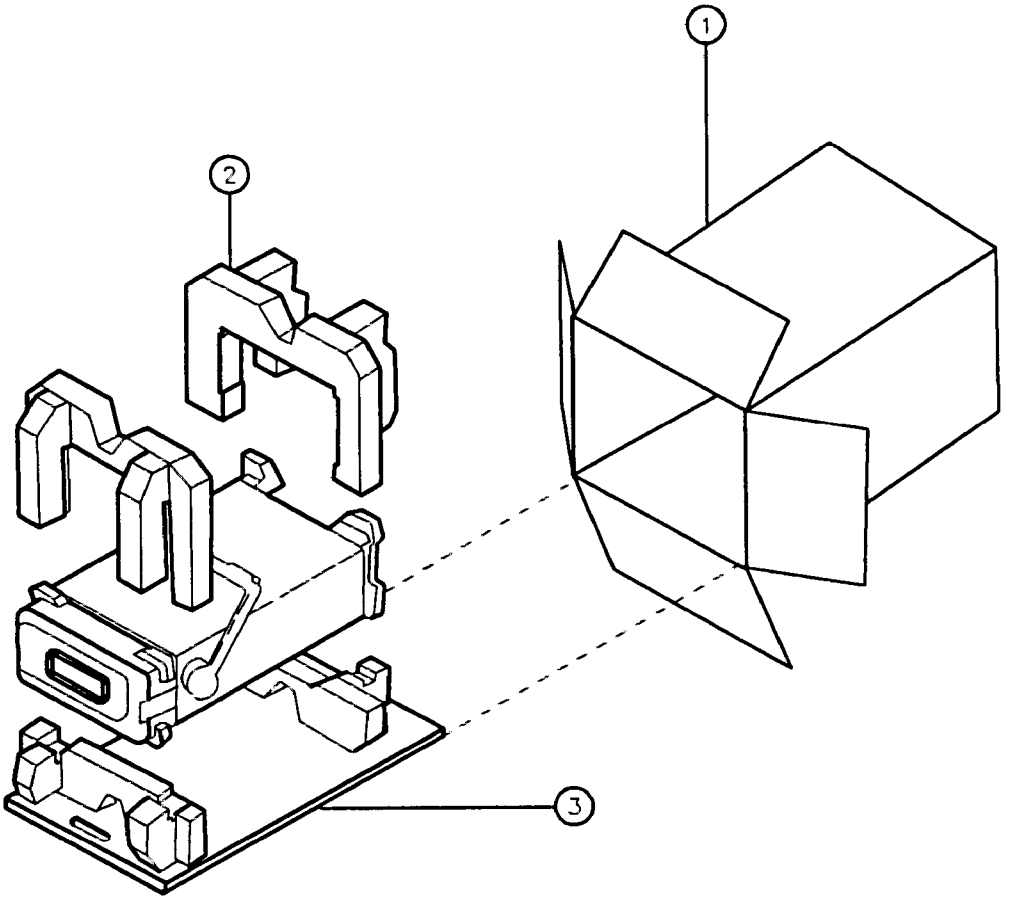

ITEM	DESCRIPTION	PART NUMBER
1	OUTER CARTON	9211-5636
2	PADS (2)	08590-80013
3	BOTTOM TRAY	08590-80014

Figure 1-3. HP 8562A/B Shipping Container and Contents

Table 1-3. Hewlett-Packard Sales and Service Offices

IN THE UNITED STATES

California

Hewlett-Packard Co.
1421 South Manhattan Ave.
P.O. Box 4230
Fullerton, CA 92631
(714) 999-6700

Hewlett-Packard Co.
301 E.Evelyn
Mountain View, CA 94039
(415) 694-2000

Colorado

Hewlett-Packard Co.
24 Inverness Place, East
Englewood, CO 80112
(303) 649-5000

Georgia

Hewlett-Packard Co.
2000 South Park Place
P.O. Box 105005
Atlanta, GA 30339
(404) 955-1500

Illinois

Hewlett-Packard Co.
5201 Tollview Drive
Rolling Meadows, IL 60008
(312) 255-9800

New Jersey

Hewlett-Packard Co.
120 W. Century Road
Paramus, NJ 07653
(201) 265-5000

Texas

Hewlett-Packard Co.
930 E. Campbell Rd.
Richardson, TX 75081
(214) 231-6101

IN AUSTRALIA

Hewlett-Packard Australia Ltd.
31-41 Joseph Street
Blackburn, Victoria 3130
895-2895

IN CANADA

Hewlett-Packard (Canada) Ltd.
17500 South Service Road
Trans-Canada Highway
Kirkland, Quebec H9J 2X8
(514) 697-4232

IN FRANCE

Hewlett-Packard France
F-91947 Les Ulis Cedex
Orsay
(6) 907-78-25

IN GERMAN FEDERAL REPUBLIC

Hewlett-Packard GmbH
Vertriebszentrale Frankfurt
Berner Strasse 117
Postfach 560 140
D-6000 Frankfurt 56
(0611) 50-04-1

IN GREAT BRITAIN

Hewlett-Packard Ltd.
King Street Lane
Winnersh, Wokingham
Berkshire RG11 5AR
0734 784774

IN OTHER EUROPEAN COUNTRIES

Hewlett-Packard (Schweiz) AG
Allmend 2
CH-8967 Widen (Zurich)
(0041) 57 31 21 11

IN JAPAN

Yokogawa-Hewlett-Packard Ltd.
29-21 Takaido-Higashi, 3 Chome
Suginami-ku Tokyo 168
(03) 331-6111

IN PEOPLE'S REPUBLIC OF CHINA

China Hewlett-Packard, Ltd.
P.O. Box 9610, Beijing
4th Floor, 2nd Watch Factory
Main Bldg.
Shuang Yu Shu, Bei San Huan
Rd.
Beijing
28-0567

IN SINGAPORE

Hewlett-Packard Singapore
Pte. Ltd.
#08-00 Inchcape House
450-2 Alexandra Road
Alexandra P.O Box 58
Singapore, 9115
4731788

IN TAIWAN

Hewlett-Packard Taiwan
8th Floor, Hewlett-Packard
Building
337 Fu Hsing North Road
Taipei
(02) 712-0404

IN ALL OTHER LOCATIONS

Hewlett-Packard Inter-Americas
3200 Hillview Avenue
Palo Alto, California 94304

Table 1-4. Recommended Test Equipment (1 of 5)

Equipment	Critical Specificiations	Recommended Model or HP Part Number	Use[1]
Spectrum Analyzer	Frequency Range: 1 MHz to 7 GHz	HP 8566A/B	A,T
Synthesized Sweeper *(2 required)*	Frequency Range: 10 MHz to 22 GHz Frequency Accy (CW): 1×10^{-9}/day Leveling Modes: Internal and External Modulation Modes: AM and Pulse Power Level Range: −35 dBm to +16 dBm	HP 8340A/B[2]	P,A,M,T,V
Synthesizer/Level Generator	Frequency Range: 1 kHz to 80 MHz Frequency Accy: 1×10^{-7}/mo Flatness: ±0.15 dB Attenuator Accuracy: <±0.09 dB	HP 3335A[2]	P,M,T,V
Synthesized Signal Generator	Frequency Range: 100 kHz to 2.5 GHz Residual SSB Phase Noise at 10 kHz offset (320 MHz < fc < 640 MHz): <−131 dBc/Hz	HP 8663A	P,V
Pulse/Function Generator	Frequency Range: 10 kHz to 50 MHz Pulse Width: 200 ns Output Amplitude: 5 V Pk-to-Pk Functions: Pulse and Triangle TTL Sync Output	HP 8116A	P
AM/FM Signal Generator	Frequency Range: 1 MHz to 200 MHz Frequency Modulation Mode Modulation Oscillator Frequency: 1 kHz FM Peak Deviation: 5 kHz	HP 8640B	A
Microwave Frequency Counter	Frequency Range: 9 MHz to 22 GHz Timebase Accy (Aging): $<5 \times 10^{-10}$/day	HP 5343A Option 001	P,A,M,V
Universal Counter	Modes. TI A → B, Frequency Count Time Interval Measurement Range: 45 μs to 120 s Timebase Accy (Aging): $<3 \times 10^{-7}$/mo	HP 5316A	P
Oscilloscope	Bandwidth (3 dB) dc to 100 MHz Minimum Vertical Deflection Factor: ≤2 mV/div	HP 1980A/B[2]	A
Measuring Receiver	Compatible with Power Sensor's dB Relative Mode Resolution: 0.01 dB Reference Accuracy: <±1.2%	HP 8902A[2]	P,A,M,T,V

[1]P=Performance Tests; A=Adjustments; M=Test and Adjustment Module; T=Troubleshooting; V=Operation Verification

[2]Part of Microwave Workstation

Table 1-4. Recommended Test Equipment (2 of 5)

Equipment	Critical Specificiations	Recommended Model or HP Part Number	Use[1]
Power Sensor	Frequency Range: 250 MHz to 350 MHz Power Range: 100 nW to 10 μW Maximum SWR: 1.15 (250 to 350 MHz)	HP 8484A	P,A
Power Sensor	Frequency Range: 100 kHz to 2.9 GHz Maximum SWR: 1.1 (1 MHz to 2.0 GHz) Maximum SWR: 1.30 (2.0 GHz to 2.9 GHz)	HP 8482A[2]	P,A,T,M,V
Power Sensor	Frequency Range: 50 MHz to 22 GHz Maximum SWR: 1.15 (50 to 100 MHz) Maximum SWR: 1.10 (100 MHz to 2 GHz) Maximum SWR: 1.15 (2.0 to 12.4 GHz) Maximum SWR: 1.20 (12.4 to 18 GHz) Maximum SWR: 1.25 (18 to 22 GHz)	HP 8485A[2]	P,A,T,M,V
Amplifier	Frequency Range: 300 to 350 MHz VSWR: <2.2 1 dB Gain Compression Point: >+15 dBm Gain ≥20 dB	HP 8447E	P,A,V
Amplifier	Frequency Range: 2.0 to 8.0 GHz Minimum Output Power (Leveled): 2.0 to 8.0 GHz: +16 dBm Output SWR (Leveled): <1.7	HP 11975A	P
Digital Voltmeter	Range: −15 V dc to +120 V dc Accuracy: <±1 mV on 10 V Range Input Impedance: ≥1 Megohm	HP 3456A[2]	A
DVM Test Leads	≥36 inches long, alligator clips, probe tips	HP 34118A	A,T
Power Supply	Output Voltage: ≥24 V dc Output Voltage Accuracy: <±0.2 V	HP 6114A	A
10 dB Step Attenuator	Attenuation Range: 30 dB Frequency Range: dc to 80 MHz Connectors: BNC female	HP 355D	P,V
1 dB Step Attenuator	Attenuation Range: 12 dB Frequency Range: dc to 80 MHz Connectors: BNC female	HP 355C	P,V,A
20 dB Fixed Attenuator	Attenuation Accy: <±1 dB Frequency Range: dc to 18 GHz Maximum SWR: 1.2 (dc to 8 GHz) Maximum SWR: 1.5 (12.4 to 18 GHz)	HP 8491B Option 020	P,V

[1]P=Performance Tests; A=Adjustments, M=Test and Adjustment Module; T=Troubleshooting; V=Operation Verification

[2]Part of Microwave Workstation

Table 1-4. Recommended Test Equipment (3 of 5)

Equipment	Critical Specificiations	Recommended Model or HP Part Number	Use[1]
10 dB Fixed Attenuator	Attenuation Accy: <±0.6 dB Frequency Range: dc to 18 GHz Maximum SWR: 1.2 (dc to 8 GHz) Maximum SWR: 1.5 (12.4 to 18 GHz)	HP 8491B Option 010	P,V
10 dB Fixed Attenuator	Attenuation Accy: <±0.3 dB Frequency Range: dc to 22 GHz Maximum SWR: 1.25 (12.4 to 22 GHz)	HP 8493C Option 010	P,V
Signature Multimeter	Clock Frequency >10 MHz	HP 5005A/B	
Reference Attenuator	Supplied with HP 8484A	HP 11708A	P,A
Termination	Frequency Range: dc to 22 GHz Impedance: 50 ohms Maximum SWR: <1.22 Connector: APC 3.5	HP 909D	P,M,V
Low-Pass Filter	Cutoff Frequency: 50 MHz Rejection at 65 MHz: >50 dB	0955-0306	P,M,V
Low-Pass Filter *(2 required)*	Cutoff Frequency: 4.1 GHz Rejection at 5.1 GHz: >50 dB	HP 360D	P,V
Double Balanced Mixer	Maximum Conversion Loss: 9 dB Frequency Range: 5 to 350 MHz Conversion Compression: 0.3 dB for 0 dBm signal at RF port Harmonic Distortion: <−30 dBc	HP 10514A	P,V
Directional Coupler	Frequency Range: 1.7 to 22 GHz Coupling: 16.0 dB (nominal) Max. Coupling Deviation: ±1 dB Directivity: 14 dB minimum Flatness: 0.75 dB maximum VSWR: <1.45 Insertion Loss: <1.3 dB	0955-0125	P
Power Splitter	Frequency Range: 1 kHz to 22 GHz Insertion Loss: 6 dB (nominal) Output Tracking: <0.25 dB Equivalent Output SWR: <1.22	HP 11667B	P,A,M,V

[1]P=Performance Tests; A=Adjustments; M=Test and Adjustment Module; T=Troubleshooting; V=Operation Verification

[2]Part of Microwave Workstation

Table 1-4. Recommended Test Equipment (4 of 5)

Equipment	Critical Specificiations	Recommended Model or HP Part Number	Use[1]
RF Detector	Frequency Range: 0.1 to 1.2 GHz Maximum SWR: <1.3 (typical) Low-Level Sensitivity: >0.35 mVμW	HP 8471A	A
Product Support Kit	No Substitute	08562-60021	A
Adapter	Type N (f) to BNC (m)	1250-1477	A
Adapter *(3 required)*	Type N (m) to BNC (f)	1250-1476	P,A,M,V
Adapter	Type N (f) to APC 3.5 (m)	1250-1750	A
Adapter *(2 required)*	Type N (m) to SMA (f)	1250-1250	P,V
Adapter *(2 required)*	Type N (m) to APC 3.5 (m)	1250-1743	P,A,M,V
Adapter	Type N (m) to APC 3.5 (f)	1250-1744	P,V,A
Adapter	Type N (f) to BNC (f)	1250-1474	P,V
Adapter	Type N (f) to SMA (f)	1250-1772	P,A
Adapter	BNC (f) to BNC (f)	1250-0059	A
Adapter	BNC Tee (f) (m) (f)	1250-0781	P,A,M,V
Adapter	BNC (f) to SMA (m)	1250-1200	P,A,V
Adapter *(2 required)*	Type N (f) to APC 3.5 (f)	1250-1745	P,V
Adapter *(2 required)*	APC 3.5 (f) to APC 3.5 (f)	5061-5311	P,A,M,V
Adapter	BNC (f) to Dual Banana Plug	1251-2816	A
Cable	RG-214/U with Type N (m) connectors Length: ≥36 in	HP 11500A	P,V
RF Cable	Semirigid 50-ohm cable, SMA (m) connectors, length 6 in to 8 in	11975-20002	P

[1]P=Performance Tests; A=Adjustments; M=Test and Adjustment Module; T=Troubleshooting; V=Operation Verification

[2]Part of Microwave Workstation

Table 1-4. Recommended Test Equipment (5 of 5)

Equipment	Critical Specificiations	Recommended Model or HP Part Number	Use[1]
Cable *(5 required)*	48-inch 50-ohm coaxial cable with BNC (m) connectors on both ends	HP 10503A	P,A,V
Cable *(2 required)*	Frequency Range: 1 kHz to 26.5 GHz Maximum SWR: <1.4 at 22 GHz Length: ≥91 cm (36 in) Connectors: APC 3.5 (m), both ends Maximum Insertion Loss: 2 dB	8120-4921	P,A,M,V
Cable *(12 required)*	HP-IB (required for using Performance Test Software and using HP 85629A/B TAM) Length: 2 m (6.6 ft)	HP 10833B	P,A,M
Test Cable	Connectors: BNC (m) to SMB (f) Length: ≥61 cm (24 in)	85680-60093	A,M
Controller	Required for using Performance Test Software No Substitute	HP 9816A, HP 9826A, HP 9836A/C, HP 9000 Model 310, or HP 9000 Model 320	P
Tuning Tool	N/A	8710-1010	A

[1]P=Performance Tests; A=Adjustments; M=Test and Adjustment Module; T=Troubleshooting, V=Operation Verification

[2]Part of Microwave Workstation

2

Adjustment Procedures

Introduction

This chapter contains information on automated and manual adjustment procedures. Perform the automated procedures using the HP 85629A/B Tests and Adjustment Module (TAM). Never perform adjustments as routine maintenance. Adjustments should be performed after a repair or performance test failure. For component-locations or schematics of board assemblies, see the *HP 8562A/B Component-Level Information* manual.

Automated Procedures **Page**

Using the TAM 2-9

Manual Procedures

1. High-Voltage Power Supply 2-12
2. Display Adjustment 2-14
3. IF Bandpass Adjustment 2-19
4. IF Amplitude Adjustment 2-24
5. Sampling Oscillator Adjustment 2-28
6. YTO Adjustment 2-33
7. First LO Distribution Amplifier Adjustment 2-35
8. Dual Band Mixer Bias Adjustment 2-37
9. YTF Adjustment (HP 8562A) 2-39
10. Frequency Response Adjustment 2-41
11. Calibrator Amplitude Adjustment 2-44
12. 10 MHz Frequency Reference Adjustment 2-46
13. Demodulator Adjustment 2-48
14. External Mixer Bias Adjustment 2-51
15. External Mixer Amplitude Adjustment 2-53
16. Second IF Gain Adjustment 2-57
17. Signal ID Oscillator Adjustment 2-59
18. 10 MHz Reference Adjustment (Option 003) 2-62

Note Before performing any adjustments, allow the instrument to warm up for 5 minutes.

Safety Considerations

Although this instrument has been designed in accordance with international safety standards, this manual contains information, cautions, and warnings which must be followed to ensure safe operation and to retain the instrument in safe condition. Service and adjustments should be performed only by qualified service personnel.

Warning **Adjustments in this section are performed with power supplied to the instrument and protective covers removed. There are voltages at many points in the instrument which can, if contacted, cause personal injury. Be extremely careful. Adjustments should be performed only by trained service personnel.**

Warning **Power is still applied to this instrument with the LINE switch in the off position. Before removing or installing any assembly or printed circuit board, remove the instrument's line power cord.**

Warning **Capacitors inside the instrument may still be charged, even if the instrument has been disconnected from its source of supply.**

Warning **Use a nonmetallic adjustment tool whenever possible.**

Which Adjustments Should Be Performed?

Table 2-1 lists the manual adjustments that should be performed when an assembly is repaired or changed. It is important to perform the adjustments in the order indicated to ensure that the instrument meets its specifications.

Test Equipment

The equipment required for the manual adjustment procedures is listed in Table 1-4, "Recommended Test Equipment." Any equipment that satisfies the critical specifications given in the table may be substituted for the preferred test equipment.

Adjustable and Factory-Selected Components

Table 2-2 lists the adjustable components by reference designation and name. For each component, the table provides a description and lists the adjustment number.

Refer to Table 2-3 for a complete list of factory-selected components used in the instrument along with their functions. Factory-selected components are identified with an asterisk on the schematic diagrams.

Adjustment Tools

For adjustments requiring a nonmetallic tuning tool, use fiber tuning tool, HP part number 8170-0033. For adjustments to the IF Bandpass, use tuning tool, HP part number 8710-1010. Never try to force an adjustment control. This is especially critical when tuning variable capacitors and slug-tuned inductors.

Required service accessories, with part numbers, are listed in "Service Kit" in Chapter 1.

Instrument Service Position

Refer to Chapter 3 for information on removing the analyzer's cover assembly and accessing all internal assemblies.

Table 2-1. Related Adjustments (1 of 2)

Assembly Changed or Repaired	Perform the Following Related Adjustments	Adjustment Number
A1A1 Keyboard	No related adjustment	
A1A2 RPG	No related adjustment	
A2 Controller	Display Adjustment	2
	Frequency Response Adjustment *(Necessary only if EEROM from old A2 Controller could not be used in new A2 or if EEROM must be replaced.)*	10
A3 Interface	Display Adjustment (Fast Zero Span)	2
	Frequency Response Adjustment	10
A4 Log Amplifier	Display Adjustment (Fast Zero Span)	2
	Demodulator Adjustment	13
A5 IF	IF Bandpass Adjustment	3
	IF Amplitude Adjustment	4
A6 Power Supply	High Voltage Power Supply Adjustment	1
	Display Adjustment	2
A6A1 HV Module	High Voltage Power Supply Adjustment	1
	Display Adjustment	2
A7 1ST LO Distribution Amplifier	First LO Distribution Amplifier Adjustment	7
	Frequency Response Adjustment *(Perform this adjustment or frequency response performance test, whichever is quicker. Perform the adjustment only if the performance test fails.)*	10
A8 Dual Band Mixer	Dual Band Mixer Bias Adjustment	8
	Frequency Response Adjustment	10
A9 Input Attenuator	Frequency Response Adjustment *(Perform this adjustment or frequency response performance test, whichever is quicker. Perform the adjustment only if the performance test fails.)*	10
A10 YTF	YTF Adjustment	9
	Frequency Response Adjustment	10
A11 YTO	YTO Adjustment	6
A12 RF Switch	Frequency Response Adjustment *(Perform this adjustment or frequency response performance test, whichever is quicker. Perform the adjustment only if the performance test fails.)*	10
A13 2nd Converter	Frequency Response Adjustment	10

Table 2-1. Related Adjustments (2 of 2)

Assembly Changed or Repaired	Perform the Following Related Adjustments	Adjustment Number
A14 Frequency Control	Display Adjustment (Fast Zero Span)	2
	YTO Adjustment	6
	First LO Distribution Amplifier Adjustment	7
	Dual Band Mixer Bias Adjustment	8
	YTF Adjustment	9
	Frequency Response Adjustment	10
A15 RF	10 MHz Frequency Reference Adjustment	12
	Calibrator Amplitude Adjustment	11
	External Mixer Bias Adjustment	14
	Sampling Oscillator Adjustment	5
	Signal ID Oscillator Adjustment	17
	External Mixer Amplitude Adjustment	15
	Frequency Response Adjustment	10
A15A1 2nd IF Amplifier	Second IF Gain Adjustment	16
A15A2 Sampler	Sampling Oscillator Adjustment	5
A16 Cal Oscillator	IF Amplitude Adjustments	4
A17 CRT Driver	Display Adjustment	2
A18V1 CRT	Display Adjustment	2
A19 HP-IB	No related adjustment	
A21 OCXO	10 MHz Reference Adjustment (Option 003)	18

Table 2-2. Adjustable Components (1 of 3)

Reference Designator	Adjustment Name	Adjustment Number	Description
A2R206	DGTL X GAIN	2	Adjusts the horizontal gain in the X line generator.
A2R209	SWEEP OFFSET	2	Adjusts the beginning of the trace to the leftmost vertical graticule line in fast-analog zero-span mode.
A2R215	DGTL Y GAIN	2	Adjusts the vertical gain in the Y line generator.
A2R218	VIDEO OFFSET	2	Adjusts the vertical position in fast-analog zero span to match the digital zero-span input.
A2R262	STOP BLANK	2	Adjusts the blanking at the end of a vector on the CRT display.
A2R263	START BLANK	2	Adjusts the blanking at the start of a vector on the CRT display.
A2R268	VIDEO GAIN	2	Adjusts the vertical gain in fast-analog zero span to match with the digital zero-span input.
A2R271	SWEEP GAIN	2	Adjusts the end of the trace to the rightmost vertical-graticule line in fast-analog zero-span mode.
A4C853	FM DEMOD	13	Adjusts the FM demodulation for a peak response.
A5L300	LC CTR 1	3	Adjusts center frequency of first stage of LC bandwidth filter to 10.7 MHz.
A5L301	LC CTR 2	3	Adjusts center frequency of second stage of LC bandwidth filter to 10.7 MHz.
A5L700	LC CTR 3	3	Adjusts center frequency of third stage of LC bandwidth filter to 10.7 MHz.
A5L701	LC CTR 4	3	Adjusts center frequency of fourth stage of LC bandwidth filter to 10.7 MHz.
A5R343	15 DB ATTEN	4	Adjusts the attenuation of the Reference 15 dB attenuator for 15 db between minimum and maximum attenuation.
A5T200	XTAL CTR 1	3	Adjusts center frequency of first stage of crystal bandwidth filter to 10.7 MHz.
A5T202	XTAL CTR 2	3	Adjusts center frequency of second stage of crystal bandwidth filter to 10.7 MHz.
A5T500	XTAL CTR 3	3	Adjusts center frequency of third stage of crystal bandwidth filter to10.7 MHz.

Table 2-2. Adjustable Components (2 of 3)

Reference Designator	Adjustment Name	Adjustment Number	Description
A5T502	XTAL CTR 4	3	Adjusts center frequency of fourth stage of crystal bandwidth filter to 10.7 MHz.
A6R410	HV ADJ	1	Adjusts the voltage between A6TP405 and A6TP401 to the voltage marked on the A6A1 High Voltage Module.
A14R42	6.01 GHz	6	Adjusts the main coil tune driver current at a YTO frequency of 6.01 GHz (near the upper YTO frequency limit).
A14R76	FM	6	Adjusts the FM span accuracy by affecting the sensitivity of the FM coil driver.
A14R93	3.2 GHz	6	Adjusts the main coil fixed driver current at a YTO frequency of 3.2 GHz (near the lower YTO frequency limit).
A14R621	LO AMPTD	7	Adjusts the amplitude of the first LO by changing the reference voltage for the leveling loop.
A14R628	GATE BIAS	7	Adjusts the gate bias for the A7 LO Distribution Amplifier.
A15C100	SMPL MATCH 1	5	Transforms the sampler input impedance to 50 ohms over the 280 to 298 MHz range.
A15C101	SMPL MATCH 2	5	Transforms the sampler input impedance to 50 ohms over the 280 to 298 MHz range.
A15C210	VCO RANGE	5	Adjusts the VCO tank capacitance so that 21 V on the VCO tune line equals 280 MHz VCO frequency.
A15C629	298 MHz ADJ	17	Fine adjusts the 298 MHz SIG ID Oscillator's frequency to optimize its performance.
A15R237	SMPL PWR ADJ	5	Adjusts the signal power level to the Sampler.
A15U302 or A15R306	10 MHz ADJ	12	Adjusts frequency of the temperature compensated crystal oscillator (TCXO) to 10 MHz.
A15R453	PHASE DETECTOR BIAS	5	Adjusts bias at pin 3 of phase detector U408 to 1.80 V.
A21	OCXO	18	Adjusts 10 MHz Reference (Option 003).

Table 2-2. Adjustable Components (3 of 3)

Reference Designator	Adjustment Name	Adjustment Number	Description
A15R561	CAL AMPTD	11	Adjusts amplitude of the 300 MHz calibrator signal to −10.0 dBm.
A15R926	EXT BIAS ZERO	14	Adjusts zero bias point of external mixer bias.
A16R32	CAL OSC AMPTD	4	Sets calibration oscillator's output power (nominally −35 dBm). This power is injected into the IF during the AUTO IF ADJUST routines.
A17R15	TRACE ALIGN	2	Adjusts the CRT display's axis rotation.
A17R25	X POSN	2	Adjusts the CRT horizontal position.
A17R19	X GAIN	2	Adjusts the horizontal-deflection amplifier's gain.
A17R26	Y POSN	2	Adjusts the CRT vertical position.
A17R20	Y GAIN	2	Adjusts the vertical-deflection amplifier's gain.
A17R50	DYN FOCUS	2	Adjusts fine focus of the CRT display.
A17R55	MIN INTEN	2	Adjusts the CRT display's minimum intensity.
A17R58	FOCUS	2	Adjusts the CRT display's focus.
A17R62	PATTERN	2	Adjusts for the best curvature in the CRT trace.
A17R63	ASTIG	2	Adjusts for spot roundness on the CRT display.

Table 2-3. Factory Selected Components

Reference Designator	Adjustment Number	Basis of Selection
A5C204	3	Selected to optimize center frequency of LC tank that loads the crystal.
A5C216	3	Selected to optimize center frequency of LC tank that loads the crystal.
A5C326	3	Selected to optimize LC pole's center frequency.
A5C327	3	Selected to optimize LC pole's center frequency.
A5C505	3	Selected to optimize center frequency of LC tank that loads the crystal.
A5C516	3	Selected to optimize center frequency of LC tank that loads the crystal.
A5C717	3	Selected to optimize LC pole's center frequency.
A5C718	3	Selected to optimize LC pole's center frequency.
A15U802	16	Selected to set the gain of the second IF to 12 dB.

Using the TAM

The HP 85629A/B Test and Adjustment Module (TAM) can be used to perform 12 of the HP 8562A/B's 18 adjustment procedures. Table 2-4 lists the TAM adjustments and their corresponding manual adjustments.

The TAM adjustments do not include procedures for choosing factory-selected components. If an adjustment cannot be made and a factory-selected component must be changed, refer to the corresponding manual adjustment.

To select an adjustment, display the TAM's Main Menu and press (ADJUST). Position the pointer next to the desired adjustment using either the knob or step keys and press (EXECUTE). Follow the instructions displayed on the analyzer's CRT.

Test Equipment

During the adjustments, the TAM displays instructions for setting the test equipment's controls. The two adjustments listed below are the only exceptions; test equipment for these adjustments are controlled automatically.

8. Low Band Flatness
9. High Band Flatness and YTF

The YTF (preselector) portion of the High Band Flatness and YTF adjustment is performed only on HP 8562A Spectrum Analyzers.

Table 2-5 lists the test equipment needed to perform each TAM adjustment. Required models must be used. Substitutions may be made for recommended models. Substitute sources must operate over the frequency ranges indicated. Recommended substitutes are listed in the Config Menu. If a user-defined source must be used, a synthesized source will make the adjustments run faster than if an unsynthesized source is used.

Note

When connecting signals from the HP 8340A (or other microwave sources) to the adjustment setup, it is necessary to use a high-frequency test cable with minimum attenuation to 26.5 GHz. HP part number 8120-4921 is recommended for its ruggedness, repeatability, and low loss above 18 GHz.

Adjustment Indicator

To aid in making adjustments, the TAM displays an "Analog Voltmeter Display Box" along the left side of the CRT. A horizontal line moves inside the box representing the needle of an analog voltmeter. A digital readout appears below the box. Tick marks are often displayed on the inside edges of the box indicating the desired needle position. (The tick marks and needle are intensified when the needle is within this acceptable region.)

During some adjustments, an arrow appears along the right edge of the box. This arrow always indicates the highest position the needle has reached. The arrow is useful when a component must be adjusted for a peak response; if the peak is overshot, the arrow indicates where the peak was. The component can be readjusted until the needle is at the same position as the arrow.

Table 2-4. TAM Adjustments

TAM Adjustment	Corresponding Manual Adjustment	Adjustment Number
1. IF Bandpass, LC Poles	IF Bandpass Adjustment	3
2. IF Bandpass, Crystal Poles	IF Bandpass Adjustment	3
3. IF Amplitude	IF Amplitude Adjustment	4
4. Sampling Oscillator	Sampling Oscillator Adjustment	5
5. YTO	YTO Adjustment	6
6. LO Distribution Amp	First LO Distribution Amplifier Adjustment	7
7. Dual Band Mixer	Dual Band Mixer Bias Adjustment	8
8. Low Band Flatness	Frequency Response Adjustment YTF Adjustment (HP 8562A)	11 10
9. High Band Flatness and YTF	Frequency Response Adjustment YTF Adjustment (HP 8562A)	11 10
10. Calibrator Amplitude	Calibrator Amplitude Adjustment	12
11. 10 MHz Reference Oscillator	10 MHz Frequency Reference Adjustment	13
12. 10 MHz Reference Oscillator	10 MHz Frequency Reference Adjustment (Option 003)	18
13. External Mixer Bias	External Mixer Bias Adjustment	15
14. External Mixer Amplitude	External Mixer Amplitude Adjustment	16

Table 2-5. Required Test Equipment for TAM

Adjustment	Equipment Used	Required Model	Recommended Model
1. IF Bandpass, LC Poles	None		
2. IF Bandpass, Crystal Poles	None		
3. IF Amplitude	Synthesizer/Level Generator	HP 3335A	
	Test Cable (SMB to BNC)		HP part number 85680-60093
4. Sampling Oscillator	Manual Probe Cable		
5. YTO	Frequency Counter (3–6.8 GHz)		HP 5342A, HP 5343A
6. LO Distribution Amplifier	Power Meter		HP 8902A, HP 436A, HP438A
	Power Sensor (3–6.8 GHz, 10–20 dBm)		HP 8485A
7. Dual Band Mixer	Manual Probe Cable		
8. Low Band Flatness	Source (10 MHz to 2.9 GHz)		HP 8340A
	Power Meter		HP 8902A, HP 436A, HP 438A
	Power Sensor (10 MHz to 2.9 GHz)		HP 8482A, HP 8481A
	Power Splitter (10 MHz to 2.9 GHz)		HP 11667B
9. High Band Flatness and YTF	Source (2.8–18/22 GHz)		HP 8340A
	Power Meter		HP 8902A, HP 436A, HP 438A
	Power Sensor (2.8–18/22 GHz) *(Option 026: 2.8–26.5 GHz)*		HP 8485A
	Power Splitter (2.8–18/22 GHz) *(Option 026: 2.8–26.5 GHz)*		HP 11667B
10. Calibrator Amplitude	Power Meter		HP 8902A, HP 436A, HP 438A
	Power Sensor	HP 8482A, HP 8481A	
11. 10 MHz Reference Oscillator	Frequency Counter (9–11 MHz)		HP 5342A, HP 5343A
12. External Mixer Bias	Manual Probe Cable		
13. External Mixer Amplitude	Power Meter		HP 8902A, HP 436A, HP 438A
	Power Sensor (310.7 MHz,–25 to –35 dBm)		HP 8484A

1. High-Voltage Power Supply

Assembly Adjusted

A6 Power Supply

Related Performance Test

There is no related performance test for this adjustment.

Description

The high-voltage power supply is adjusted for the voltage marked on the A6A1 HV Module. The A6A1 HV module is characterized in the factory to ensure that the CRT filament voltage is set to 5.9 V rms when the +110 V dc (nominal) supply is set to the voltage marked on the HV module.

Warning **To minimize shock hazard, use a nonmetallic adjustment tool for adjusting the A6 Power Supply.**

Warning **The following procedure probes voltages that, if contacted, could cause personal injury or death.**

Note Adjustment of the high-voltage power supply should not be a routine maintenance procedure. Adjustment should be done only when the A6 Power Supply, A6A1 HV Module, or A18 CRT is repaired or replaced.

Note If either the CRT or HV Module has been replaced, it will be necessary to perform the display adjustments after this adjustment.

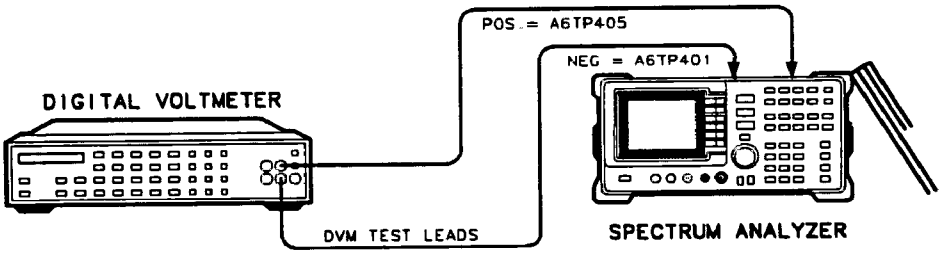

Figure 2-1. High Voltage Power Supply Adjustment Setup

Equipment

Digital Multimeter ..... HP 3456A
DVM Test Leads ..... HP 34118A

Procedure

Warning **After disconnecting the ac line power cord, allow at least 30 seconds for capacitors in the high-voltage supply to discharge before removing the protective cover from the A6 Power Supply.**

1. Set the HP 8562A/B (LINE) switch OFF, disconnect the power cord, and remove the analyzer's cover. Fold down the A2 Controller, A3 Interface, A4 Log Amplifier, and A5 IF assemblies. Remove the power supply cover.
2. Position the HP 8562A/B as shown in Figure 2-1. Connect the positive DVM lead to A6TP405 and the negative DVM lead to A6TP401.
3. Reconnect the power cord to the HP 8562A/B and set the (LINE) switch ON.
4. Set the HP 3456A controls as follows:

   FUNCTION ..... DC VOLTS
   RANGE ..... 1000 VOLTS

5. Record the voltage marked on the A6A1 HV Module.

   Voltage marked on A6A1 HV Module = _____ V dc

6. Note the value of inductor A6L401, located next to the main transformer, T103.
   a. If the value of A6L401 is 10 mH, adjust A6R410 HV ADJ for a voltage equal to 2 volts above the voltage recorded in step 5.
   b. If the value of A6L401 is 20 mH, adjust A6R410 HV ADJ for a voltage equal to the voltage recorded in step 5.
7. Set the HP 8562A/B (LINE) switch OFF and disconnect the power cord. Wait at least 30 seconds for the high-voltage power supply capacitors to discharge.
8. Disconnect the DVM test leads from TP401 and TP405. Reinstall the power supply cover.

2. Display Adjustment

Assembly Adjusted

A2 Controller
A17 CRT Driver

Related Performance Test

Sweep Time Accuracy (Sweep Times <30 ms)

Description

Coarse adjustment of the deflection amplifiers, Z-axis amplifiers, and line generators is done using the CRT adjust pattern. Fine adjustments use the graticule. The fast zero-span amplitude adjustments correct for differences between analog and digital display nodes. The displayed sweep time accuracy is adjusted in the fast zero-span sweep adjustments.

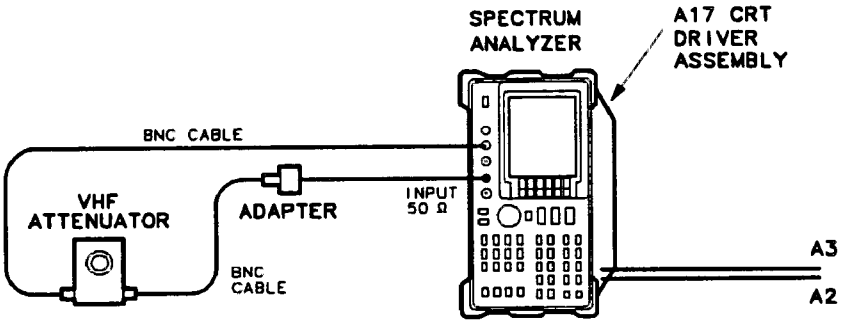

Figure 2-2. Display Adjustment Setup

Equipment

10 dB VHF Step Attenuator ..... HP 355D

Adapters
Type N (m) to BNC (f) ..... HP part number 1250-1476
Type N (f) to APC-3.5 (f) ..... HP part number 1250-1745
(Option 026 only)

Cables
BNC, 122 cm *(2 required)* ..... HP 10503A

Procedure

1. Set the HP 8562A/B (LINE) switch OFF. Remove the analyzer's cover and fold out the A2 Controller and A3 Interface assemblies as illustrated in Figure 2-2. Connect the equipment as shown in Figure 2-2.

Preliminary Adjustments

2. Set A17R62 PATTERN to midrange. Turn the HP 8562A/B (LINE) switch ON and allow the analyzer to warm up for at least 3 minutes. Adjust A17R55 MIN INTEN until a trace appears on the CRT. Adjust A17R58 FOCUS for the best possible focus.
3. Press (DISPLAY) and **MORE**. Set **INTEN** to 255 and the **FOCUS** to 128.
4. Press (RECALL), **MORE**, and **CRT ADJ PATTERN**.

Deflection Adjustments

5. Adjust the rear-panel TRACE ALIGN until the leftmost line of the test pattern is parallel with the CRT bezel. See Figure 2-3.
6. Adjust the rear-panel X POSN and A17R19 X GAIN until the leftmost "@" characters and the softkey labels appear just inside the left and right edges of the CRT bezel.
7. Adjust the rear-panel Y POSN and A17R20 Y GAIN until the softkey labels align with their appropriate softkeys.

Z-Axis Adjustments

8. Locate the dot just below the HP logo. See Figure 2-3. Adjust A17R63 ASTIG for the smallest round dot possible.
9. Adjust A17R58 FOCUS for the best focus of the test pattern's outside box and "@" characters. A compromise between the focus of the "@" characters and box will be necessary.
10. Rotate A17R55 MIN INTEN clockwise until two dots appear next to the center dot below the HP logo. Other dots and lines may also be visible. Adjust A17R55 until the two dots just barely disappear.

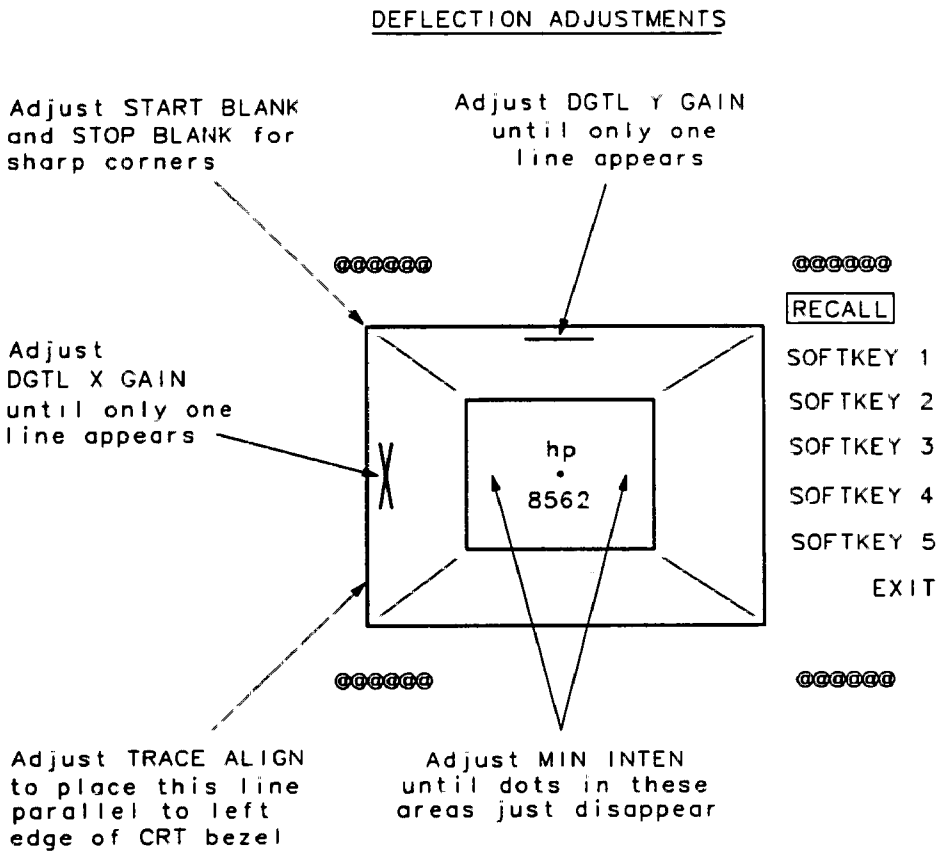

Figure 2-3. CRT Adjust Pattern

11. Press **EXIT**, (DISPLAY), **MORE**, and **GRAT OFF**.
12. Adjust A17R55 MIN INTEN until the horizontal line at the bottom of the display disappears. Set **INTEN** to 1.
13. Adjust A17R55 MIN INTEN until the display is dim but still readable. Set **INTEN** to 255.
14. Repeat steps 12 and 13 until no horizontal line appears along the bottom of the display with INTENSITY set to 255, and the display is dim but readable with INTENSITY set to 1.
15. Set **INTEN** to 90. Press **STORE INTEN**, and **GRAT ON**.
16. Adjust A17R63 ASTIG for the best focus of the outside graticule lines.
17. Adjust A17R51 DYN FOCUS for the best overall focus.

Line Generator Adjustments

18. Press (RECALL), **MORE**, and **CRT ADJ PATTERN**. Fold up the A3 Interface Assembly.

19. Refer to Figure 2-3 for locating the lines used for adjusting DGTL X GAIN and DGTL Y GAIN. Each of these lines is actually two lines adjusted for coincidence. The two lines will form an "X" if they are not adjusted properly.

20. Adjust A2R206 DGTL X GAIN until the two vertical lines near the left edge of the display appear to be one single line.

21. Adjust A2R215 DGTL Y GAIN until the two horizontal lines near the top edge of the display appear to be one single line.

22. Adjust A2R262 STOP BLANK and A2R263 START BLANK for the sharpest corners of the outer box in the test pattern. The intensity of the corners should be the same as the middle of the lines between the corners.

23. Press **EXIT**, (DISPLAY), **MORE**, and **GRAT ON**.

24. If necessary, readjust the STOP BLANK and START BLANK adjustments for the best-looking intersection of graticule lines. This will be most notable along the center vertical and center horizontal graticule lines.

Fast Zero-Span Adjustments

25. Set A2R218 VIDEO OFFSET and A2R268 VIDEO GAIN to midrange.

26. Set the HP 355D to 30 dB attenuation.

27. Press (PRESET) on the analyzer, and connect the equipment as shown in Figure 2-2. Set the HP 8562A/B controls as follows:

    CENTER FREQ ..... 200 MHz
    SPAN ..... 0 Hz
    REF LVL ..... −40 dBm
    RES BW ..... 1 kHz
    VIDEO BW ..... 300 Hz

28. Press MARKER (ON), (MKR), **MARKER RL**. Set **SWEEP TIME** to 10 ms.

29. Adjust A2R209 SWEEP OFFSET to place the beginning of the trace at the leftmost vertical graticule line.

30. Adjust A2R271 SWEEP GAIN to place the end of the trace at the tenth vertical graticule line (one division from the right edge of the graticule).

31. Press (SAVE), **SAVE STATE**, and **STATE 0**.

32. Set **REF LVL** to +30 dBm. Press (SAVE), **SAVE STATE**, **STATE 1**. Set **SWEEP TIME** to 50 ms.

33. Press (SAVE), **SAVE STATE**, and **STATE 2**.

34. Press (RECALL) and **RECALL STATE**.

35. Press **STATE 2**.

2. Display Adjustment

36. Note the vertical position of the trace.
37. Press STATE 1.
38. Adjust A2R218 VIDEO OFFSET to position the trace halfway between its original position and the position noted in step 36.
39. Press STATE 0.
40. Adjust A2R268 VIDEO GAIN to position the trace halfway between its original position and the top horizontal graticule line.
41. Repeat steps 35 through 40 until the vertical positions of the trace in STATE 1 and STATE 2 coincide, and the trace aligns with the top horizontal graticule in STATE 0.
42. Press STATE 0.
43. Adjust A2R271 SWEEP GAIN to place the end of the trace at the rightmost vertical graticule line.

3. IF Bandpass Adjustment

Assembly Adjusted

A5 IF Assembly

Related Performance Test

Resolution Bandwidth Accuracy and Selectivity

Description

The center frequency of each IF bandpass filter pole is adjusted by DAC-controlled varactor diodes and an inductor (for the LC poles) or a transformer (for the crystal poles). The inductors and transformers are for coarse tuning and the varactors are for fine tuning by the microprocessor. The inductors and transformers are adjusted such that the varactor diodes are biased near the middle of their capacitance range. The varactor diode bias is measured with the DVM.

Note This adjustment should be necessary only after repair of the A5 IF Assembly; it should not be performed on a routine basis.

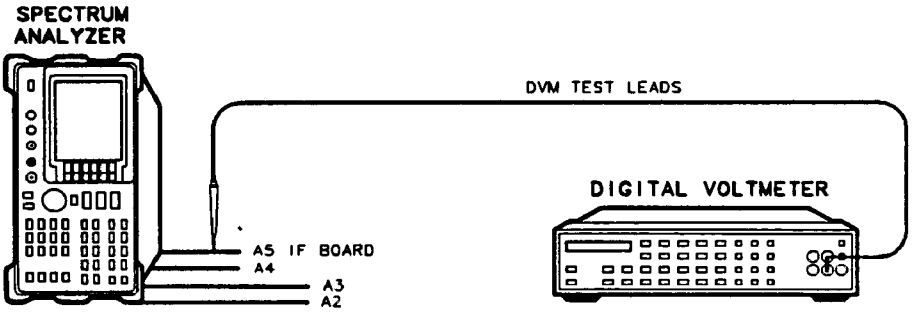

Figure 2-4. IF Bandpass Adjustment

Equipment

Digital Voltmeter ..... HP 3456A
DVM Test Leads ..... HP 34118A
Special Tuning Tool .....HP part number 8710-1010

Procedure

1. Set the HP 8562A/B (LINE) switch OFF and disconnect the power cord. Remove the analyzer cover and fold down the A2 Controller, A3 Interface, A4 Log Amp, and A5 IF Assemblies. Reconnect the power cord and set the (LINE) switch ON. Allow the analyzer to warm up for at least 30 minutes.
2. Connect the negative DVM lead to pin 6 of A5J6 (see Figure 2-4). Set the HP 3456A controls as follows:

   FUNCTION ..... DC VOLTS
   RANGE ..... 10 V

3. On the HP 8562A/B press (PRESET), (SPAN), (2), (MHz), (AMPLITUDE), MORE, IF ADJUST, and IF ADJ OFF.

LC Bandpass Adjustments

4. On the HP 8562A/B, press ADJ CURR IF STATE. Wait for the IF ADJUSTING STATUS message to disappear before continuing with the next step.
5. Read the voltage on A5TP5 (this is an empty-hole type of test point). If the voltage is less than +6.06 V dc, turn A5L300 LC CTR 1 clockwise. If the voltage is greater than +6.26 V dc, turn LC CTR 1 counterclockwise.
6. Repeat steps 4 and 5 until the voltage reads +6.16 V dc ±100 mV.

Note

If there is insufficient range in an LC CTR adjustment, it will be necessary to select the value of an associated fixed capacitor listed in Table 2-6. Center the LC CTR adjustment and press ADJ CURR IF STATE. After the IF ADJUST STATUS message disappears, read the DVM. Select the appropriate capacitor value based on the DVM reading and currently loaded capacitor as shown in Table 2-7. Refer to Table 2-10 for capacitor part numbers.

Caution

Set the HP 8562A/B (LINE) switch OFF before removing or replacing any shield.

7. Move the positive DVM lead to A5TP6.
8. Adjust A5L301 LC CTR 2 using the procedure in steps 4 through 6.
9. Move the positive DVM test lead to A5TP1 (this is a resistor-lead type of test point).
10. Adjust A5L700 LC CTR 3 using the procedure in steps 4 through 6.
11. Move the positive DVM test lead to A5TP2.
12. Adjust A5L701 LC CTR 4 using the procedure in steps 4 through 6.

Table 2-6. Factory-Selected LC Filter Capacitors

LC CTR Adjustment	Fixed Factory Select Capacitor
A5L300 LC CTR 1	A5C326
A5L301 LC CTR 2	A5C327
A5L700 LC CTR 3	A5C717
A5L701 LC CTR 4	A5C718

Table 2-7. LC Factory-Selected Capacitor Selection

DVM Reading (V)	Currently Loaded Capacitor Value (pF)*						
	6.8	8.2	10	12	15	18	20
0 to 1.5	•	•	•	•	•	•	0
1.5 to 2.5	18	18	•	•	•	•	0
2.5 to 3.5	15	15	18	18	•	•	0
3.5 to 4.5	10	12	15	15	18	•	0
4.5 to 5.5	8.2	10	12	15	18	•	0
5.5 to 6.5	no change	no change	no change	no change	no change	no change	no change
6.5 to 7.5	no change	no change	no change	no change	no change	no change	[illegible]
7.5 to 8.5	•	6.8	8.2	10	12	15	18
8.5 to 9.5	•	•	6.8	8.2	12	15	18
9.5 to 10	•	•	6.8	8.2	10	12	15

* A bullet (•) indicates a condition that should not exist; suspect broken hardware.

XTAL Bandpass Adjustments

13. On the HP 8562A/B, press [SPAN], [1], [MHz], [AMPLITUDE], MORE, and IF ADJUST.
14. Move the positive DVM test lead to A5TP7.
15. On the HP 8562A/B, press ADJ CURR IF STATE. Wait for the IF ADJUST STATUS message to disappear before continuing to the next step.
16. Read the voltage displayed on the DVM. If the voltage is less than +6.06 V dc, turn A5T200 XTAL CTR 1 clockwise. If the voltage is greater than +6.26 V dc, turn XTAL CTR 1 counterclockwise.
17. Repeat steps 15 and 16 until the voltage reads +6.16 V dc ±100 mV.

Note

If there is insufficient range in an LC CTR adjustment, it will be necessary to select the value of an associated fixed capacitor listed in Table 2-8. Center the LC CTR adjustment and press ADJ CURR IF STATE. After the IF ADJUST STATUS message disappears, read the DVM. Select the appropriate capacitor value based upon the DVM reading and currently loaded capacitor as shown in Table 2-9. Refer to Table 2-10 for capacitor part numbers.

Caution Set the HP 8562 (LINE) switch OFF before removing or replacing any shield.

18. Move the positive DVM test lead to A5TP8.
19. Adjust A5T202 XTAL CTR 2 using the procedure in steps 15 through 17.
20. Move the positive DVM test lead to A5TP3.
21. Adjust A5T500 XTAL CTR 3 using the procedure in steps 15 through 17.
22. Move the positive DVM test lead to A5TP4.
23. Adjust A5T502 XTAL CTR 4 using the procedure in steps 15 through 17.

Table 2-8. Factory-Selected XTAL Filter Capacitors

XTAL CTR Adjustment	Fixed Factory Select Capacitor
A5T200 XTAL CTR 1	A5C204
A5T202 XTAL CTR 2	A5C216
A5T500 XTAL CTR 3	A5C205
A5T502 XTAL CTR 4	A5C516

Table 2-9. XTAL Factory-Selected Capacitor Selection

DVM Reading (V)	Currently Loaded Capacitor Value (pF)*					
	15	18	20	22	24	27
0 to 1.5	•	•	•	•	•	•
1.5 to 2.5	27	•	•	•	•	•
2.5 to 3.5	22	27	27	•	•	•
3.5 to 4.5	18	22	24	27	27	•
4.5 to 5.5	18	20	22	24	27	•
5.5 to 6.5	no change	no change	no change	no change	no change	no change
6.5 to 7.5	no change	no change	no change	no change	no change	no change
7.5 to 8.5	•	15	18	18	22	24
8.5 to 9.5	•	15	15	18	20	24
9.5 to 10	•	•	15	18	20	24

* A bullet (•) indicates a condition that should not exist; suspect broken hardware.

Table 2-10. Capacitor Part Numbers

Capacitor Value (pF)	HP Part Number
6.8	0160-4793
8.2	0160-4792
10	0160-4791
12	0160-4790
15	0160-4789
18	0160-4788
20	0160-5699
22	0160-4787
24	0160-5903
27	0160-4786

4. IF Amplitude Adjustment

Assembly Adjusted

A16 Cal Oscillator
A5 IF Assembly

Related Performance Test

IF Gain Uncertainty Test

Description

The output amplitude of the A16 Cal Oscillator is adjusted so that a −55 dBm signal at the 10.7 MHz IF input to the A5 IF Assembly (A5J3) results in a signal displayed at −60 dBm. This is not a real-time adjustment; the effect of the adjustment can be seen only after the **ADJ CURR IF STATE** sequence has been completed. **ADJ CURR IF STATE** causes the IF gains to be adjusted with the "new" output amplitude from the A16 Cal Oscillator. When the adjustment sequence has been completed, the result of the adjustment should cause the −35 dBm signal at A5J5 to be displayed at −60 dBm.

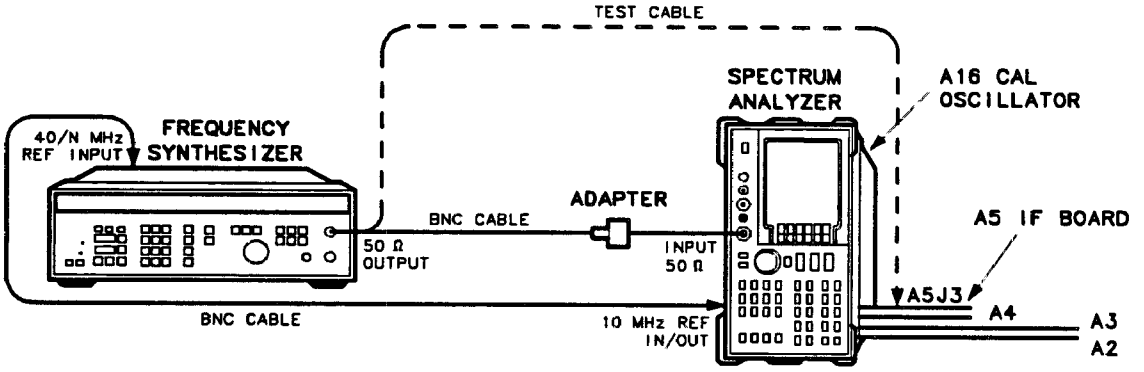

Figure 2-5. IF Amplitude Adjustment Setup

The attenuation of the Reference 15 dB Attenuator on the A15 IF Assembly is adjusted so that stepping a source's amplitude and the spectrum analyzer's reference level by 50 dB results in a displayed amplitude difference of 50 dB.

Equipment

Frequency Synthesizer ..... HP 3335A

Adapters
Type N (m) to BNC (f) ..... HP part number 1250-1476
Type N (f) to APC-3.5 (f) ..... HP part number 1250-1745
(Option 026 only)

Cables
BNC, 122 cm (48 in) ..... HP 10503A
Test Cable ..... HP part number 85680-60093

Procedure

1. Set the HP 8562A/B (LINE) switch to OFF. Remove the analyzer's cover and place the analyzer in the service position as illustrated in Figure 2-5.
2. Disconnect W29, violet coax cable, from A5J3. Connect the test cable between A5J3 and the 50Ω output of the HP 3335A. Set the HP 8562A/B (LINE) switch ON.

A16 Cal Oscillator Amplitude Adjustment

3. Set the HP 8562A/B controls as follows:

   CENTER FREQ ..... 10.7 MHz
   SPAN ..... 200 kHz
   REF LVL ..... −60 dBm
   ATTEN ..... 0 dB
   dB/DIV ..... 1 dB/div
   RES BW ..... 300 kHz
   VIDEO BW ..... 100 Hz

4. On the HP 8562A/B, press MARKER (ON), (AMPLITUDE), MORE, IF ADJUST, and IF ADJ OFF.
5. Set the HP 3335A controls as follows:

   FREQUENCY ..... 10.7 MHz
   AMPLITUDE ..... −55 dBm

6. Note the marker value. Ideally it should read −60 dBm ±0.1 dB.
7. If the marker reads below −60.1 dBm, rotate A16R32 CAL OSC AMPTD one-third turn counterclockwise for every 0.1 dB below −60 dBm. If the marker reads above −59.9 dBm, rotate A16R32 CAL OSC AMPTD one-third turn clockwise for every 0.1 dB above −60 dBm. A change in the displayed amplitude will not be seen at this point.

Note If A16R3 has inadequate range, refer to "Inadequate CAL OSC AMPT Range" in Chapter 9.

8. Press ADJ CURR IF STATE. The displayed amplitude and the MARKER reading should change.
9. Repeat steps 7 and 8 until the marker reads −60 dBm ±0.1 dB.
10. Disconnect the test cable from A5J3 and reconnect W29 to A5J3.

Reference Attenuator Adjustment

11. Set the HP 3335A (AMPLITUDE) to −60 dBm.
12. Connect a BNC cable between the 50Ω output of the HP 3335A and the HP 8562A/B INPUT 50Ω.
13. On the HP 8562A/B, press (AMPLITUDE), MORE, and REF LVL CAL. Use the front-panel knob or step keys to place the peak of the displayed signal 3 dB to 5 dB below the reference level.
14. Press (PEAK SEARCH) and MARKER DELTA on the HP 8562A/B. Set the analyzer's reference level to −10 dBm.
15. Change the HP 3335A (AMPLITUDE) to −10 dBm.
16. Press (AMPLITUDE), MORE, and IF ADJUST on the HP 8562A/B.
17. Note the ΔMKR amplitude. Ideally, it should read 50.00 dB ±0.1 dB.
18. If the ΔMKR amplitude is less than 49.9 dB, rotate A5R343 15 dB ATTEN one-half turn counterclockwise for each 0.1 dB below 50.00 dB. If the ΔMKR amplitude is greater than 50.1 dB, rotate A5R343 15 dB ATTEN one-half turn clockwise for each 0.1 dB above 50.00 dB. Do not adjust 15 dB ATTEN more than five turns before continuing with the next step.
19. Press ADJ CURR IF STATE on the HP 8562A/B. Note the ΔMKR amplitude reading.
20. Set the HP 8562A/B reference level to −60 dBm and the MARKER (OFF). Repeat steps 18 and 19 until the ΔMKR amplitude reads 50.00 dB ±.1 dB.
21. Repeat steps 11 through 20 until the ΔMKR amplitude reading is 50.00 dB ±0.1 dB.

Adjustment Verification

22. On the HP 8562A/B, disconnect W29 from A5J3. Connect the test cable between A5J3 and the 50Ω output of the HP 3335A.
23. Set the HP 8562A/B reference level to −10 dBm.
24. Set the HP 3335A amplitude to −5 dBm.
25. Press MARKER (ON) and MARKER NORMAL on the HP 8562A/B.
26. The MARKER amplitude should read −10 dBm ±0.13 dB. If the reading is outside of this range, repeat steps 4 through 21.

27. On the HP 8562A/B, reconnect W29 to A5J3. Press (PRESET) and set the controls as follows:

    CENTER FREQ ..... 300 MHz
    SPAN ..... 0 Hz
    REF LVL ..... −10 dBm
    RES BW ..... 300 kHz

28. Connect a BNC cable between the HP 8562A/B CAL OUTPUT and INPUT 50Ω.

29. On the HP 8562A/B, press MARKER (ON), (AMPLITUDE), MORE, and REF LVL CAL.

30. Use the knob or step keys to adjust the REF LVL CAL setting until the MARKER reads −10.00 dBm ±0.1 dB.

31. On the HP 8562A/B, press STORE REF LVL.

5. Sampling Oscillator Adjustment

Assembly Adjusted

A15 RF Assembly

Related Performance Test

There is no related performance test for this adjustment procedure.

Description

The phase detector bias is adjusted for 1.8 V dc. The sampling oscillator tank circuit is adjusted for a tuning voltage of 21 V dc when the oscillator is set to 298 MHz. The voltage monitored is actually the tuning voltage divided by 4.05. A coarse-tune procedure is also included, but should be necessary only when the coaxial resonator is replaced. The power and match of the sampling oscillator signal to the A15A2 Sampler are also adjusted.

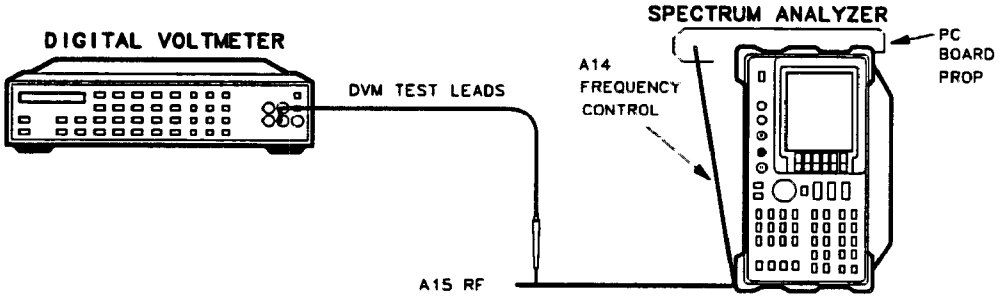

Figure 2-6. Sampler Adjustment Setup

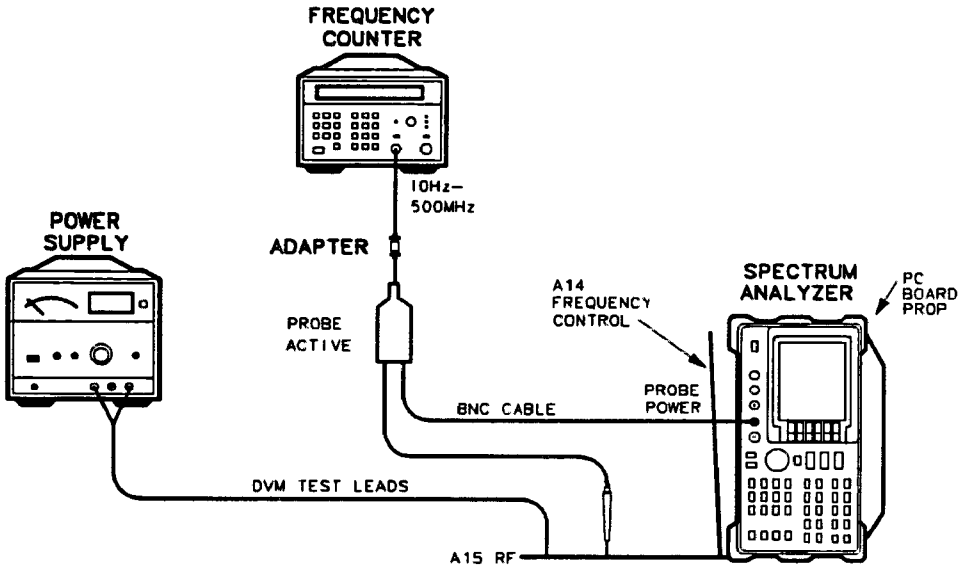

Figure 2-7. Coarse-Tune Adjustment Setup

Equipment

An asterisk(*) indicates equipment used only for the coarse-tune procedure.

Digital Voltmeter ..... HP 3456A
DVM Test Leads ..... HP 34118A
Frequency Counter* ..... HP 5343A
Active Probe* ..... HP 1121A
Power Supply* ..... HP 6114A
1 Megohm Resistor* ..... HP part number 0757-0080
Probe Power Supply ..... HP 1122A

Adapters
Type BNC (f) to BNC (f)* ..... HP part number 1250-0059

Cables
BNC, 122 cm (48 in)* ..... HP 10503A

Procedure

1. Set the HP 8562A/B (LINE) switch to OFF and disconnect the line power cord. Remove the analyzer's cover and fold down the A15 RF and A14 Frequency Control assemblies. Prop up the A14 Frequency Control assembly. Reconnect the line power cord and set the (LINE) switch ON. Connect the equipment as illustrated in Figure 2-6.
2. Press (PRESET) on the HP 8562A/B and set the controls as follows:

   FREQUENCY ..... 661 MHz
   CF STEP ..... 30 MHz
   SPAN ..... 0 Hz

3. Set the HP 3456A controls as follows:

   FUNCTION ..... DC VOLTS
   RANGE ..... 10 V, MANUAL

Phase Detector Bias Adjustment

4. Connect the negative DVM lead to A15J200 pin 6, and the positive lead to A15J200 pin 15.
5. Adjust A15R453 PHASE DET BIAS for a DVM reading of +1.8 ±0.02 V dc.

Sampling Oscillator Fine-Tune Adjustment

6. Connect the positive DVM lead to A15J200 pin 13. Leave the negative DVM lead connected to A15J200 pin 6.
7. Adjust A15C210 VCO RANGE for a DVM reading of +5.18 ±0.05 V dc.

Note If A15C210 cannot be adjusted for 5.18 V dc, perform the coarse-tune adjustment located at the end of this procedure.

Power and Sampler Match Adjustments

8. Connect the negative DVM test lead to A15J400 pin 6, and the positive DVM test lead to A15J400 pin 1.
9. Set the HP 8562A/B CENTER FREQ to 511 MHz. This sets the sampling oscillator to 288 MHz.
10. Adjust A15C100 SMPL MATCH 1 and A15C101 SMPL MATCH 2 to peak the voltage displayed on the DVM.

Note If a peak cannot be obtained, the sampling oscillator power might be too low. Adjust A15R237 SMPL PWR ADJ clockwise one-eighth turn and repeat step 10. If necessary, continue increasing OSC PWR, but do not allow the displayed voltage to exceed +3 V dc when peaked.

11. Adjust A15R237 SMPL PWR ADJ to set the displayed voltage to +2.1 ±0.2 V dc.
12. Record the displayed voltage in Table 2-11 as the displayed voltage for the sampling oscillator frequency of 288 MHz.
13. Press (FREQUENCY) on the HP 8562A/B. Use the step keys to set the analyzer CENTER FREQ to the frequencies listed in Table 2-11. At each listed frequency, record the displayed voltage in the table.
14. If the difference between the maximum and minimum voltages is less than 0.50 V, and all voltage readings are between +1.5 and +2.5 V dc, proceed to step 19.
15. Locate the CENTER FREQ at which the voltage difference from +2.0 V dc is the greatest. Use the (▲) and (▼) keys to set the HP 8562A/B to this frequency.
16. Readjust SMPL MATCH 1 and SMPL MATCH 2 to set the displayed voltage to +2.0 ±0.2 V dc.
17. Set the HP 8562A/B CENTER FREQ to 511 MHz.
18. Repeat steps 11 through 14.
19. Move the positive DVM test lead to A15J400 pin 3.
20. Set the HP 8562A/B CENTER FREQ to 511 MHz.
21. Readjust A15R237 SMPL PWR ADJ if necessary, until the voltage at A15J400 pin 3 is −2.0 ±0.2 V dc and the voltage at A15J400 is +2.0 ±0.2 V dc.
22. Disconnect the DVM probes from A15J400.

Coarse-Tune Adjustment

Note This adjustment should be necessary only if the coaxial resonator Z200 has been replaced or if there was insufficient range in the Sampling Oscillator Fine-Tune Adjustment.

23. Set the HP 8562A/B (LINE) switch OFF and remove the top shield over the sampling oscillator. Connect the equipment as shown in Figure 2-7.
24. Remove any existing shorts from the exposed center-conductor of coaxial resonator Z200 to the ground plane.
25. Set the HP 6114A Power Supply for a 21 V dc output ±0.2 V. Connect the positive supply lead to X201 pin 1 and the negative supply lead to X201 pin 4.
26. Connect the active probe to TP201.
27. Set the HP 8562A/B (LINE) switch ON and set the controls as follows:

    CENTER FREQ ..... 661 MHz
    SPAN ..... 0 Hz

28. Set the HP 5343A Frequency Counter as follows:

    SAMPLE RATE ..... Counterclockwise
    50Ω-MΩ SWITCH 50Ω
    10 Hz-500 MHz/500 MHz-26.5 GHz SWITCH ..... 10 Hz 500 MHz
    RESOLUTION ..... 100 kHz

29. Starting at the end of Z200 nearest X201, short the center conductor to a hole in the ground plane with the lead of a 1 MΩ resistor (HP part number 0757-0059) until the frequency counter reads 298 MHz ±4 MHz.
30. Once the proper tap has been found, solder the resistor lead to the ground plane and the center conductor of Z200. Cut away the rest of the resistor.

5. Sampling Oscillator Adjustment

Table 2-11. Sampling Adjustments

Center Frequency (MHz)	Sampling Oscillator (MHz)	Displayed Voltage (V dc)				
		1st Trial	2nd Trial	3rd Trial	4th Trial	5th Trial
391	280					
451	284					
481	286					
511	288					
541	290					
571	292					
601	294					
631	296					
661	298					

31. Remove the power supply leads and the active probe.
32. Set the HP 8562A/B (LINE) switch OFF and reinstall the top shield. Set the (LINE) switch ON.
33. Proceed to step 2.

6. YTO Adjustment

Assembly Adjusted

A14 Frequency Control Assembly

Related Performance Test

Frequency Span Accuracy

Description

The YTO main coil adjustments are made with the phase-lock loops disabled. The YTO endpoints are adjusted to bring these points within the capture range of the main loop. The YTO FM coil is adjusted to place the 300 MHz CAL OUTPUT signal at the center vertical graticule in a 20 MHz span.

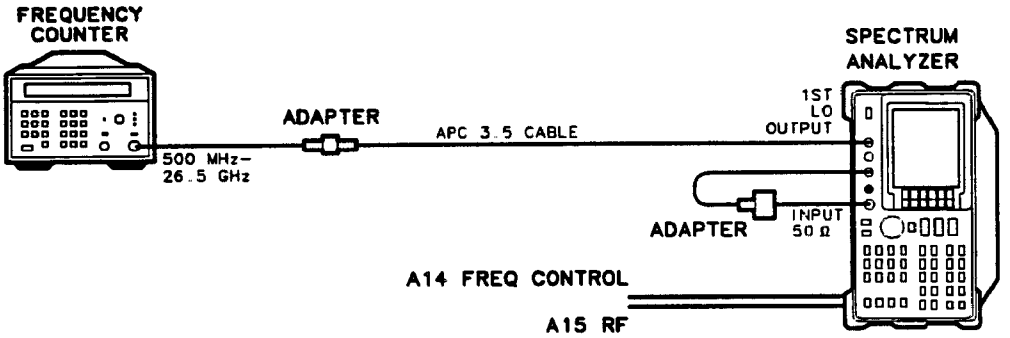

Figure 2-8. YTO Adjustment Setup

Equipment

Microwave Frequency Counter ..... HP 5343A Option 001

Adapters

Type N (m) to BNC (f) ..... HP part number 1250-1476
Type APC-3.5 (f) to APC-3.5 (f) ..... HP part number 5061-5311
Type N (f) to APC-3.5 (f) ..... HP part number 1250-1745
(Option 026 only)

Cables

BNC, 122 cm (48 in) ..... HP 10503A
SMA, 61 cm (24 in) ..... HP part number 8120-1578

Procedure

YTO Main Coil Adjustments

1. Set the HP 8562A/B [LINE] switch OFF. Remove the analyzer's cover and fold down the A15 RF and A14 Frequency Control assemblies.
2. Disconnect the 50Ω termination from the 1ST LO OUTPUT. Connect the equipment as shown in Figure 2-8. Set the [LINE] switch ON.
3. Move the jumper on A14J23 from the NORM position (pins 1 and 2 jumpered) to the TEST position (pins 2 and 3 jumpered).
4. On the HP 8562A/B, press the following keys: [PRESET], [EXT], LOCK HARMONIC, [6], [Hz], [SPAN], ZERO SPAN, [FREQUENCY], [18.8893], [GHz], [TRIG], SINGLE, [SAVE], SAVE LOCK OFF, SAVE STATE, and STATE 0. Press [FREQUENCY], [35.7493], [GHz], [SAVE], SAVE STATE, STATE 1, [RECALL], RECALL STATE, and STATE 0.
5. On the HP 5343A, press [SHIFT] [7] and set the controls as follows:

   SAMPLE RATE ..... Full Counterclockwise
   10 Hz-500 MHz/500 MHz-26.5 GHz SWITCH ..... 500 MHz-26.5 GHz

6. Adjust A14R93 3.2 GHz for a frequency counter reading of 3.200 GHz ±1 MHz.
7. On the HP 8562A/B, press STATE 1.
8. Adjust A14R42 6.01 GHz for a frequency counter reading of 6.010 GHz ±1 MHz.
9. On the HP 8562A/B, press STATE 0.
10. Repeat steps 6 through 9 until both of these interacting adjustments meet their tolerances.
11. Place the jumper on A14J23 in the NORM position (pins 1 and 2 jumpered).
12. Disconnect the SMA cable from the 1ST LO OUTPUT jack and install a 50Ω termination on the 1ST LO OUTPUT.

YTO FM Coil Adjustments

13. On the HP 8562A/B, press [PRESET] and set the controls as follows:

    CENTER FREQ ..... 300 MHz
    SPAN ..... 20 MHz

14. Adjust A14R76 FM until the 300 MHz CAL OUTPUT SIGNAL is aligned with the center vertical graticule line.

7. 1ST LO Distribution Amplifier Adjustment

Assembly Adjusted

A14 Frequency Control Assembly

Related Performance Test

1ST LO OUTPUT Amplitude

Description

The gate bias for the A7 LO Distribution Amplifier is adjusted to the value specified on A7. LO AMPTD is adjusted so that the LO SENSE voltage is 6 mV more negative than the value specified on the A7 LODA label.

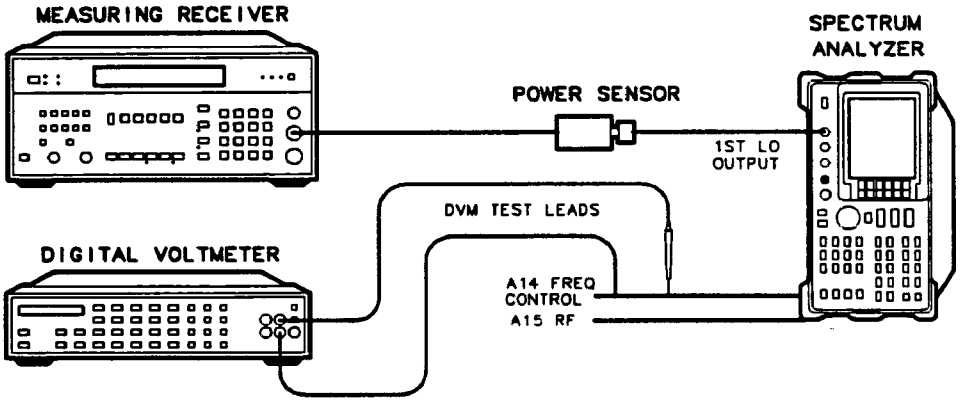

Figure 2-9. 1st LO Distribution Amplifier Adjustment Setup

Equipment

Measuring Receiver	HP 8902A
DVM	HP 3456A
Power Sensor	HP 8485A
DVM Test Leads	HP 34118A

Procedure

1. Set the HP 8562A/B (LINE) switch OFF and disconnect the line cord. Remove the cover and fold down the A15 RF and A14 Frequency Control assemblies. Reconnect the line cord.
2. Remove the 50Ω termination from the 1ST LO OUTPUT.
3. Connect the positive lead of the DVM probe to pin 15 of A14J18. Connect the DVM ground lead to pin 6 of A14J18. See Figure 2-9.

4. Set the HP 3456A controls as follows:

   FUNCTION ..... DC VOLTS
   RANGE ..... 10 V
   RESOLUTION ..... 1 mV

5. Turn the HP 8562A/B (LINE) switch ON.
6. Adjust A14R628 GATE BIAS for a DVM reading within 5% of the GATE BIAS voltage printed on the A7 LO Distribution Amplifier label.
7. Zero and calibrate the HP 8902A/HP 8485A in LOG mode (power levels read in dBm). Enter the power sensor's 5 GHz Cal Factor into the HP 8902A.
8. Connect the power sensor to the HP 8562A/B's 1ST LO OUTPUT.
9. On the HP 8562A/B, press (PRESET), (SPAN), ZERO SPAN, (FREQUENCY), CENTER FREQ, (5), (GHz).
10. Connect the positive DVM lead to A14J18 pin 13.
11. Note the LO SENSE voltage printed on the A7 LODA label. Adjust A14R621 LO AMPTD until the DVM reads 6 mV more negative than the LO SENSE voltage printed on the A7 LODA label. For example, if the LO SENSE voltage is −170 mV, adjust A14R621 until the DVM reads −176 mV.
12. Check that the HP 8902A power level reads greater than +15.2 dBm.
13. Disconnect the power sensor from the 1ST LO OUTPUT and reconnect the 50Ω termination.
14. Disconnect the DVM leads from A14J18.

8. Dual Band Mixer Bias Adjustment

Assembly Adjusted

A14 Frequency Control Assembly

Related Performance Test

Frequency Response
Second Harmonic Distortion (>2.9 GHz)
Third Order Intermodulation Distortion (>2.9 GHz)

Description

The A8 Dual Band Mixer bias is set by a DAC on the A14 Frequency Control Assembly. The DAC values for each band are stored in EEROM on the A2 Controller Assembly. The EEROM is placed in its WR ENA (write-enable) mode and the DAC value is adjusted to yield the factory-derived bias for each band. The new DAC values are stored in EEROM and the EEROM is placed in WR PROT (write-protect) mode.

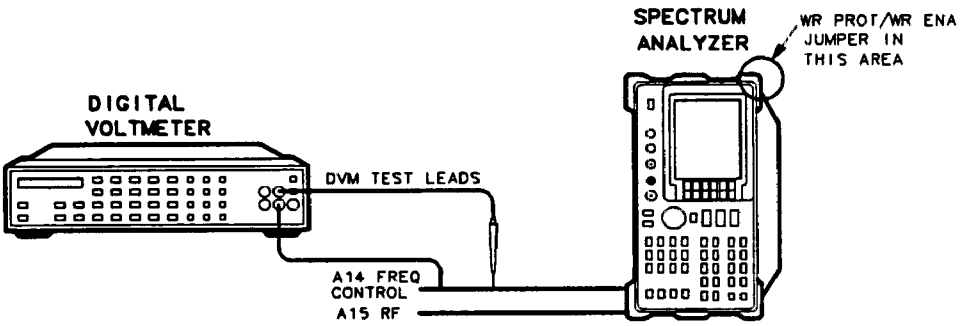

Figure 2-10. Dual Band Mixer Bias Adjustment Setup

Equipment

DVM ..... HP 3456A
DVM Test Leads ..... HP 34118A

Procedure

1. Connect the equipment as shown in Figure 2-10. Connect the positive DVM probe lead to A14J19 pin 13. Connect the ground lead to pin 6 of A14J19. Set the HP 3456A to 10 V dc range with 10 mV resolution.
2. Copy the bias voltages printed on the A8 Dual Band Mixer label into Table 2-12.
3. On the HP 8562A/B, place the WR PROT/WR ENA jumper on the A2 Controller Assembly in the WR ENA position. Press (PRESET), (SPAN), ZERO SPAN, (FREQUENCY), (3), (GHz), (INT), and MIXER BIAS. The current mixer bias DAC value for Band 1 should be displayed in the active function area of the display.

4. Adjust the DAC value, using only the front-panel knob or keypad, for a DVM reading within 50 mV of the Band 1 mixer bias voltage listed in Table 2-12.
5. On the HP 8562A/B, press (FREQUENCY), (8), (GHz), (INT), and MIXER BIAS. The current mixer bias DAC value for Band 2 should now be displayed in the active function area.
6. Adjust the DAC value, using only the front-panel knob or keypad, for a DVM reading within 50 mV of the Band 2 Mixer Bias Voltage listed in Table 2-12.
7. On the HP 8562A/B, press (FREQUENCY), (1), (5), (GHz), (INT), and MIXER BIAS. The current mixer bias DAC value for Band 3 should now be displayed in the active function area.
8. Adjust the DAC value, using only the front-panel knob or keypad, for a DVM reading within 50 mV of the Band 3 mixer bias voltage listed in Table 2-12.
9. On the HP 8562A/B, press (FREQUENCY), (2), (0), (GHz), (INT), and MIXER BIAS. The current mixer bias DAC value for Band 4 should now be displayed in the active function area.
10. Adjust the DAC value, using only the front-panel knob or keypad, for a DVM reading within 50 mV of the Band 4 mixer bias voltage listed in Table 2-12.
11. On the HP 8562A/B, press STORE DATA and YES.
12. Place the WR PROT/WR ENA jumper on the A2 Controller assembly to the WR PROT position.

Table 2-12. A8 Bias Voltages

Band	Bias Voltage
1	
2	
3	
4	

9. YTF Adjustment (HP 8562A)

WRONG PROCEDURE! THIS IS FOR AN 8564A, NOT AN 8562A.

Assembly Adjusted

A14 Frequency Control Assembly

Related Performance Test

Image, Multiple, and Out-of-Band Responses
Second Harmonic Distortion
Frequency Response

Description

Note The YTF adjustment procedure applies only to HP 8562A instruments.

The slope and offset of the A10 YTF tuning voltage are set by DACs on the A14 Frequency Control assembly. The offset DAC value is optimized at a low frequency and the slope DAC value is optimized at a high frequency.

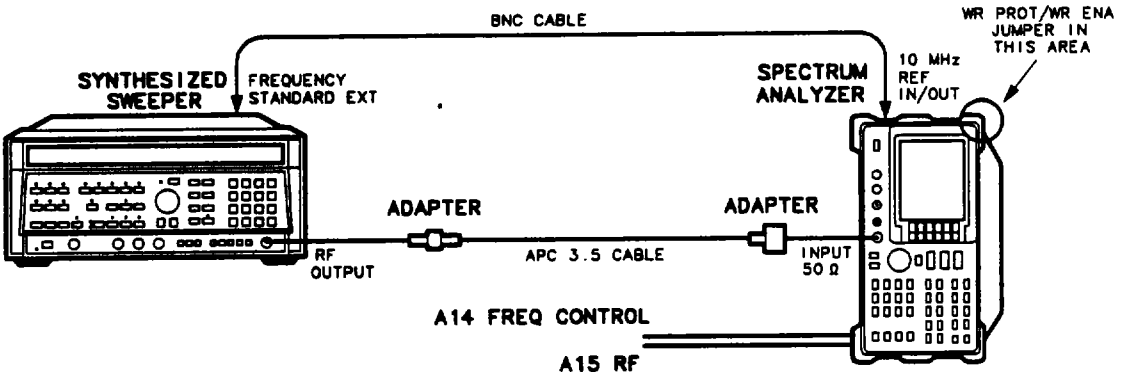

Figure 2-11. YTF Adjustment Setup

Equipment

Synthesized Sweeper ..... HP 8340A

Adapters
Type N (m) to APC-3.5 (f) ..... HP part number 1250-1744
(Not required for Option 026)
Type APC-3.5 (f) to APC-3.5 (f) ..... HP part number 5061-5311
(2 required for Option 026)

Cables
APC-3.5, 91 cm (36 in) ..... HP part number 8120-4921

Procedure

1. Set the HP 8562A (LINE) switch OFF and disconnect the line cord. Remove the analyzer's cover and connect the line cord. Connect the equipment as illustrated in Figure 2-11. Set the (LINE) switch ON.
2. Move the WR PROT/WR ENA jumper on the A2 Controller Assembly to the WR ENA position.
3. Press (PRESET) on the HP 8562A and set the controls as follows:

   CENTER FREQ ..... 3.0 GHz
   SPAN ..... 0 Hz

4. On the HP 8562A, press (AMPLITUDE), MORE, IF ADJUST, IF ADJ OFF, MIXER (INT), PRESEL ADJ, and PRESET ALL DACS.
5. Press (INSTR PRESET) on the HP 8340A and set the controls as follows:

   CW ..... 3.0 GHz
   POWER LEVEL ..... −10 dBm
   FREQ STANDARD SWITCH (rear panel) ..... EXT

6. Press PRESEL OFFSET on the HP 8562A. Use the front-panel knob to peak the displayed trace. Note the offset value below.

   Offset at 3.0 GHz = _____

7. Set the HP 8562A CENTER FREQ and the HP 8340A CW to 6.0 GHz.
8. On the HP 8562A, press MIXER (INT), PRESEL ADJ, and PRESEL OFFSET. Enter the OFFSET value noted in step 6.
9. Press PRESEL SLOPE on the HP 8562A. Use the front-panel knob to peak the displayed trace. Note the slope value below.

   Slope at 6.0 GHz = _____

10. Set the HP 8562A CENTER FREQ and the HP 8340A (CW) to 3.0 GHz.
11. On the HP 8562A, press MIXER (INT), PRESEL ADJ, and PRESEL SLOPE. Enter the SLOPE value noted in step 9.
12. Repeat steps 6 through 11 until both the SLOPE and OFFSET are peaked. Adjust the OFFSET only at 3.0 GHz and the SLOPE only at 6.0 GHz.
13. Press PREV MENU, STORE DATA, and YES on the HP 8562A.
14. Place the WR PROT/WR ENA jumper on the A2 Controller Assembly in the WR PROT position.
15. On the HP 8562A press (RECALL), MORE, FACTORY PRSEL PK, (SAVE), and SAVE PRESEL PK.

10. Frequency Response Adjustment

Assembly Adjusted

A15 RF Assembly

Related Performance Test

Displayed Average Noise Level
Frequency Response

Description

A signal of the same known amplitude is applied to the spectrum analyzer at several different frequencies. At each frequency, the DAC controlling the flatness compensation amplifiers is adjusted to place the peak of the displayed signal at the same place on the screen. The preselector is centered at each frequency for the HP 8562A before setting the DAC value. The DAC values are stored in EEROM.

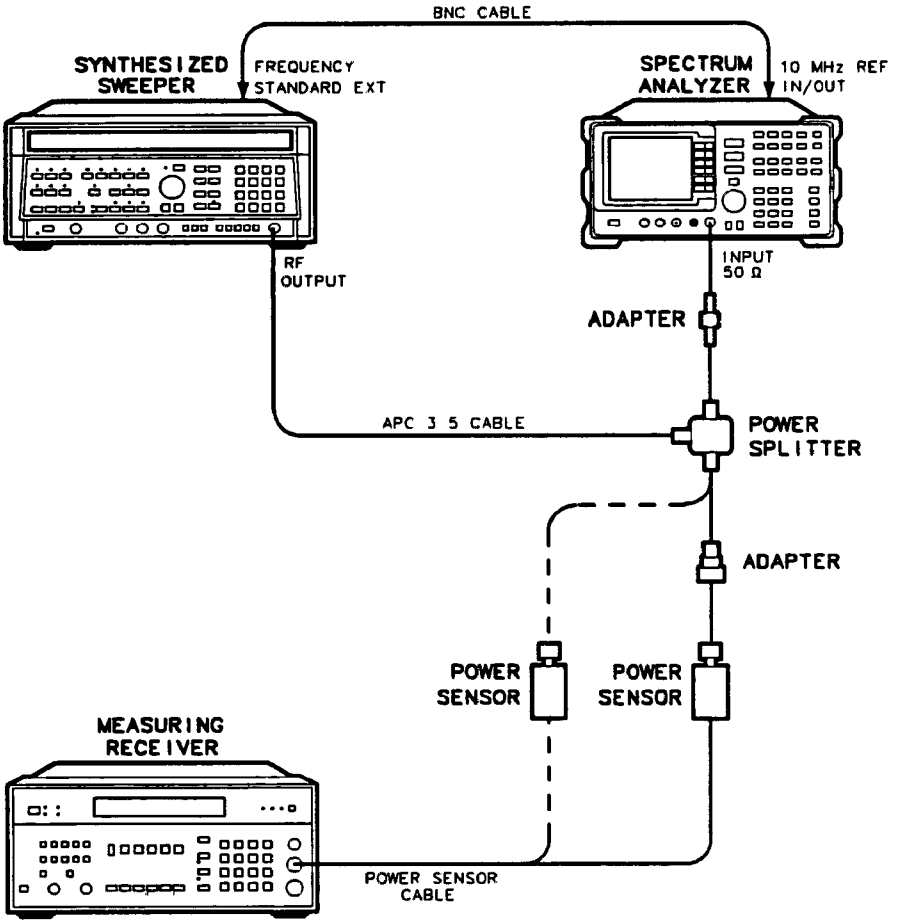

Figure 2-12. Frequency Response Adjustment Setup

Equipment

Synthesized Sweeper ..... HP 8340A
Measuring Receiver ..... HP 8902A
Power Sensor ..... HP 8482A
Power Sensor ..... HP 8485A
Power Splitter ..... HP 11667B

Adapters
Type N (m) to APC-3.5 (m) ..... HP part number 1250-1743
Type N (f) to APC-3.5 (m) ..... HP part number 1250-1750
Type APC-3.5 (f) to APC-3.5 (f) ..... HP part number 5061-5311

Cables
BNC, 122 cm (48 in) ..... HP 10503A
APC-3.5, 91 cm (36 in) ..... HP part number 8120-4921

Procedure

1. Connect the equipment as shown in Figure 2-12. Do not connect the HP 8482A Power Sensor to the HP 11667B Power Splitter.
2. Zero and calibrate the HP 8902A/HP 8482A combination in log mode (power levels read out in dBm) and connect the power sensor through an adapter to the power splitter.
3. Place the WR PROT/WR ENA jumper on the A2 Controller Assembly in the WR ENA position.
4. Press (PRESET) on the HP 8562A/B and set the controls as follows:

   CENTER FREQ ..... 10 MHz
   SPAN ..... 0 MHz
   RES BW ..... 300 kHz
   dB/DIV ..... 2 dB

5. Press (INSTR PRESET) on the HP 8340A and set the controls as follows:

   CW ..... 10 MHz
   POWER LEVEL ..... −4 dBm

6. On the HP 8562A/B, press MARKER (ON), MIXER (INT) and **FLATNESS**. The current value of the RF Gain DAC should be displayed in the active function area.
7. Enter the appropriate Power Sensor Calibration factor into the HP 8902A.
8. Set the HP 8340A (CW) output to the frequency indicated in the active function area of the HP 8562A/B display. Adjust the HP 8340A POWER LEVEL for a −10 dBm reading on the HP 8902A.
9. On the HP 8562A/B, adjust the RF Gain DAC value using the front-panel knob or keypad until the marker reads −10 dBm ±0.10 dB.
10. On the HP 8562A/B, press (▲) to proceed to the next frequency.
11. Repeat steps 7 through 10 for all Low Band frequencies (Band #0).
12. Press **NEXT BAND** on the HP 8562A/B.

13. Disconnect the HP 8482A and its adapter from the HP 11667B. Connect the HP 8485A to the HP 8902A. Zero and calibrate the HP 8902A/HP 8485A combination. Connect the HP 8485A to the HP 11667B Power Splitter.
14. Enter the appropriate power sensor calibration factor into the HP 8902A.
15. Set the HP 8340A (CW) output to the frequency indicated in the active function area of the HP 8562A/B display.
16. Adjust the HP 8340A POWER LEVEL to place the signal midscreen on the HP 8562A/B display.
17. *Omit this step if spectrum analyzer is an HP 8562B. On the HP 8562A, press* PRESEL AUTO CTR. *Wait for the* CENTERING *message to disappear.*
18. On the HP 8562A/B, press FLATNESS DATA omit if flatness data stage implemented
19. Adjust the HP 8340A POWER LEVEL for a −10 dBm reading on the HP 8902A.
20. On the HP 8562A/B, adjust the RF gain DAC value using the knob or keypad until the marker reads −10 dBm ±0.10 dB.
21. On the HP 8562A/B, press (▲) to proceed to the next frequency.
22. Repeat steps 15 through 21 for the remaining frequencies in Band 1.
23. On the HP 8562A/B, press NEXT BAND to proceed to Band 2.
24. Repeat steps 15 through 21 for the remaining frequencies in Band 2.
25. On the HP 8562A/B, press NEXT BAND to proceed to Band 3.
26. Repeat steps 15 through 21 for the remaining frequencies in Band 3.
27. On the HP 8562A/B, press NEXT BAND to proceed to Band 4.
28. Repeat steps 15 through 21 for the remaining frequencies in Band 4.
29. Press PREV MENU, STORE DATA, and YES on the HP 8562A/B.
30. Place the WR PROT/WR ENA jumper on the A2 Controller Assembly in the WR PROT position.

11. Calibrator Amplitude Adjustment

Assembly Adjusted

A15 RF Assembly

Related Performance Test

Calibrator Amplitude and Frequency Accuracy

Description

The CAL OUTPUT amplitude is adjusted for −10.00 dBm measured directly at the front panel CAL OUTPUT jack.

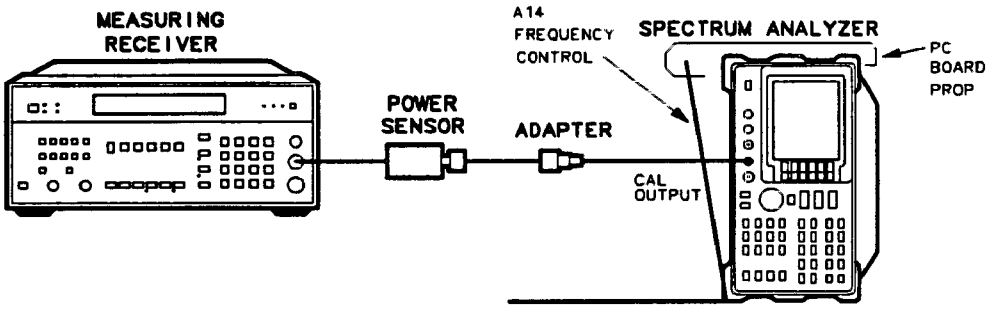

Figure 2-13. Calibrator Amplitude Adjustment Setup

Equipment

Measuring Receiver ..... HP 8902A
Power Sensor ..... HP 8482A

Adapters
Type N (f) to BNC (m) ..... HP part number 1250-1477

Procedure

Note The HP 8562A/B should be allowed to warm up for at least 30 minutes before performing this adjustment.

1. Place the HP 8562A/B in the service position as shown in Figure 2-13. Prop the A14 Frequency Control Board Assembly in the service position.
2. Zero and calibrate the HP 8902A/HP 8482A combination in log display mode. Enter the power sensor's 300 MHz Cal Factor into the HP 8902A.
3. Connect the HP 8482A through an adapter directly to the CAL OUTPUT jack on the HP 8562A/B front panel.
4. Adjust A15R561 CAL AMPTD for a −10.00 dBm reading on the HP 8902A display.

12. 10 MHz Frequency Reference Adjustment

Assembly Adjusted

A15 RF Assembly

Related Performance Test

10 MHz Reference Output Accuracy

Description

The frequency counter is connected to the CAL OUTPUT, which is locked to the 10 MHz reference. This yields better effective resolution. The temperature-compensated crystal oscillator (TCXO) is adjusted for a frequency of 300 MHz as read by the frequency counter.

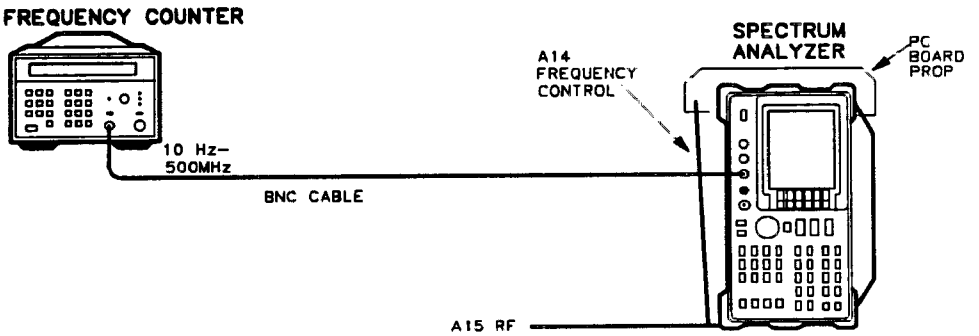

Figure 2-14. 10 MHz Frequency Reference Adjustment Setup

Equipment

Microwave Frequency Counter ..... HP 5343A Option 001

Cables
BNC, 122 cm (48 in) ..... HP 10503A

Procedure

Note Allow the HP 8562A/B to warm up for at least 30 minutes before performing this adjustment.

1. Connect the equipment as shown in Figure 2-14. Prop up the A14 Frequency Control Assembly.
2. Set the HP 5343A controls as follows:

   SAMPLE RATE ..... Midrange
   50Ω-1 MΩ SWITCH 50Ω
   10 Hz-500 MHz/500 MHz-26.5 GHz SWITCH ..... 10 Hz-500 MHz

3. Set the HP 8562A/B 10 MHz reference to INT.

Note When the 10 MHz reference is set to EXT, the TCXO is not operating and warmed up. If the reference is set to EXT, set the reference to INT and allow 30 minutes for the TCXO to warm up.

4. Adjust A15R306 10 MHz ADJ for a frequency counter reading of 300.000000 MHz ±30 Hz.

13. Demodulator Adjustment

Assembly Adjusted

A4 Log Amplifier Assembly

Related Performance Test

There are no related performance tests for this adjustment procedure.

Description

A 5 kHz peak-deviation FM signal is applied to the INPUT 50Ω. The detected audio is monitored by an oscilloscope. FM DEMOD is adjusted to peak the response displayed on the oscilloscope.

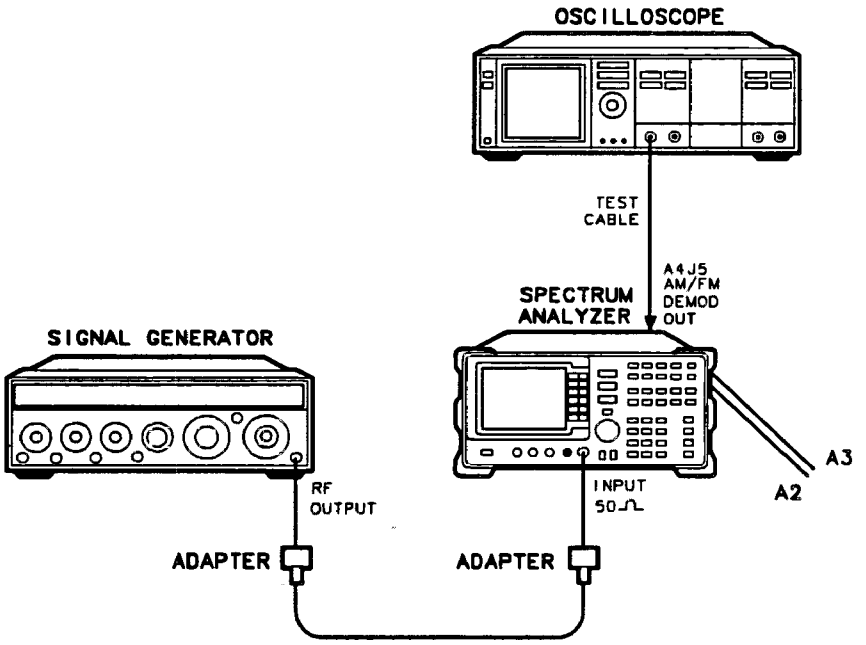

Figure 2-15. Demodulator Adjustment Setup

Equipment

AM/FM Signal Generator ..... HP 8640B
Oscilloscope ..... HP 1980A/B

Adapters
Type N (m) to BNC (f) ..... HP part number 1250-1476
(2 required)
Type N (f) to APC-3.5 (f) ..... HP part number 1250-1745
(Option 026 only)

Cables
BNC, 122 cm (48 in) ..... HP 10503A
Test Cable ..... HP part number 85680-60093

Procedure

1. Set the HP 8562A/B (LINE) switch OFF. Place the analyzer in the service position as illustrated in Figure 2-15. Disconnect W28 from A4J5.
2. Connect the test cable from the oscilloscope Channel 1 input to A4J5. Set the HP 8562A/B (LINE) switch ON. Connect the HP 8640B RF OUTPUT to the HP 8562A/B INPUT 50Ω.
3. Set the HP 8640B controls as follows:

   RANGE MHz 61-128
   FREQUENCY ..... 100.000 MHz
   OUTPUT LEVEL ..... −10 dBm
   RF ..... ON
   AM ..... OFF
   FM ..... INT
   MODULATION FREQUENCY ..... 1000 Hz
   PEAK DEVIATION ..... 5 kHz
   SCALE FM ..... (k/MHz)

4. Adjust the HP 8640B FM Deviation vernier for a full-scale reading on the meter. Set the FM to OFF.
5. Set the HP 1980A/B controls as follows:

   CH 1 ..... ON
   CH 2 ..... OFF
   CH 1 ..... VOLTS/DIV 50 mV
   TIMEBASE ..... MAIN
   CH A COUPLING ..... AC
   SECS/DIV ..... 1.00 ms/DIV
   TRIGGER ..... INT
   HF REJ ..... ON
   TRIGGER COUPLING ..... AC

6. On the HP 8562A/B, press (PRESET) and set the controls as follows:

CENTER FREQ	100 MHz
SPAN	5 MHz
REF LVL	−10 dBm
RES BW	100 kHz

7. On the HP 8562A/B, press (PEAK SEARCH), MARKER ▸ CF, (SPAN), ZERO SPAN, (DEMOD), FM DEMOD ON, (TRIG), and SINGLE.
8. Set the FM to INT on the HP 8640B.
9. A 1 kHz sine wave should be observed on the oscilloscope.
10. Adjust A4C853 FM DEMOD for a maximum peak-to-peak response on the oscilloscope.

Note

It is possible to do this adjustment without an oscilloscope by adjusting A4C853 FM DEMOD for the loudest audio tone from the internal speaker. The adjustment might be broader and less accurate than when peaking the oscilloscope response.

11. Set the HP 8562A/B (LINE) switch to OFF. Disconnect the test cable from A4J5 and reconnect W28 to A4J5.

14. External Mixer Bias Adjustment

Assembly Adjusted

A15 RF Assembly

Related Performance Test

There are no related performance tests for this adjustment procedure.

Description

A voltmeter is connected to the HP 8562A/B IF INPUT with the external mixer bias set to OFF. The bias is adjusted for a 0 V dc output.

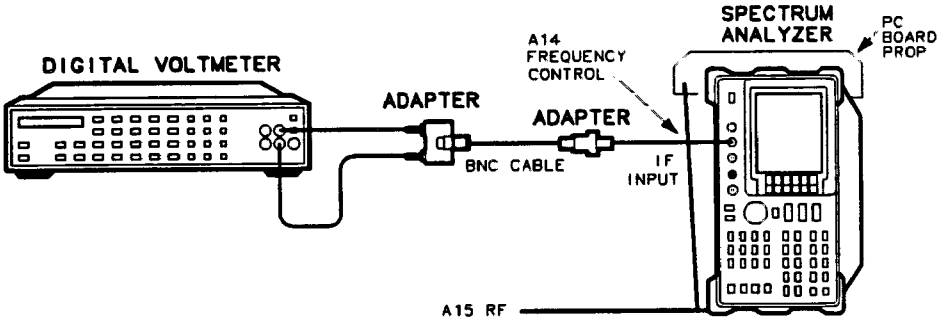

Figure 2-16. External Mixer Bias Adjustment Setup

Equipment

DVM ..... HP 3456A

Adapters
Type BNC (f) to SMA (m) ..... HP part number 1250-1200
Type BNC (f) to dual banana plug ..... HP part number 1251-2816

Cables
BNC, 122 cm (48 in) ..... HP 10503A

Procedure

1. Set the HP 8562A/B (LINE) switch OFF and disconnect the power cord. Remove the analyzer's cover and connect the equipment as illustrated in Figure 2-16. Reconnect the power cord and set the (LINE) switch ON.
2. Set the HP 3456A controls as follows:

   FUNCTION ..... DC VOLTS
   RANGE ..... 0.1 V
   RESOLUTION ..... 100 nV

3. On the HP 8562A/B press (EXT), **BIAS**, and **BIAS OFF**.
4. Adjust A15R926 EXT BIAS ZERO for a DVM reading of 0.000 V dc ±12.5 mV.

15. External Mixer Amplitude Adjustment

Assembly Adjusted

A15 RF Assembly

Related Performance Test

IF Input Amplitude Accuracy

Description

The user-loaded conversion losses for K-band are recorded and reset to 30 dB. A 310.7 MHz signal is applied to the power sensor and the power level of the source is adjusted for a −30 dBm reading. The signal is then applied to the IF INPUT. The slope of the Flatness Compensation Amplifiers is determined. These amplifiers are then adjusted (via DACs) to place the displayed signal at the reference level.

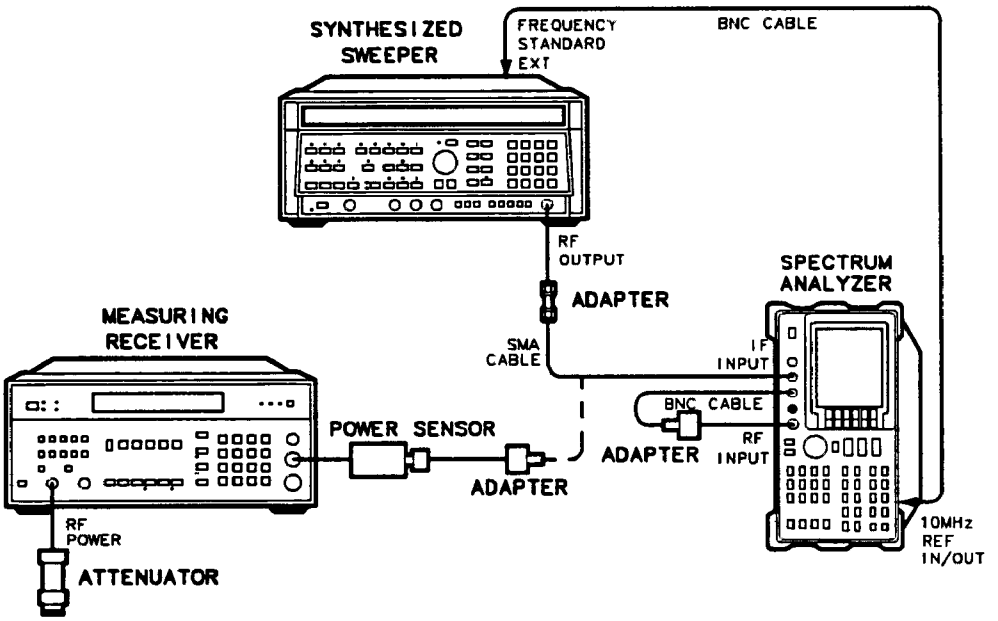

Figure 2-17. External Mixer Amplitude Adjustment Setup

Equipment

Synthesized Sweeper ..... HP 8340A
Measuring Receiver ..... HP 8902A
Power Sensor ..... HP 8484A
50 MHz Reference Attenuator ..... HP 11708A
(supplied with HP 8484A)

Adapters
Type N (f) to SMA (f) ..... HP part number 1250-1772
Type N (m) to BNC (f) ..... HP part number 1250-1476
Type APC 3.5 (f) to APC 3.5 (f) ..... HP part number 5061-5311
Type N (f) to APC 3.5 (f) ..... HP part number 1250-1745
(Option 026 only)

Cables
BNC, 122 cm (48 in) ..... HP 10503A
SMA, 61 cm (24 in) ..... HP part number 8120-1578

Procedure

1. Set the HP 8562A/B (LINE) switch OFF and disconnect the power cord. Remove the analyzer's cover and reconnect the power cord.
2. Set up the equipment as illustrated in Figure 2-17. Do not connect the SMA cable to the HP 8562A/B.
3. Move the WR PROT/ WR ENA jumper on the A2 Controller Assembly to the WR ENA position. Set the HP 8562A/B (LINE) switch ON.
4. On the HP 8562A/B, press (PRESET), MIXER (EXT), AMPTD CORRECT, and CNV LOSS VS FREQ.
5. Note the conversion loss displayed in the active function block. Use the (▲) and (▼) keys to step through the conversion losses for other frequencies. If all conversion losses are 30.0 dB, proceed to step 10.
6. Record the 18 GHz conversion loss in Table 2-13.
7. Enter a conversion loss of 30 dB.
8. Press (▲) on the HP 8562A/B.
9. Repeat the procedure of steps 6 through 8 for the remaining frequencies listed in Table 2-13.
10. Press (INSTR PRESET) on the HP 8340A and set the controls as follows:

    CW ..... 310.7 MHz
    POWER LEVEL ..... −30 dBm

Table 2-13. Conversion Loss Data

Frequency (GHz)	Conversion Loss (dB)
18	
20	
22	
24	
26	
27	

11. Zero and calibrate the HP 8902A/HP 8484A combination in log mode. Enter the power sensor's 50 MHz Cal Factor into the HP 8902A. Connect the power sensor, through an adapter, to the SMA cable.
12. Adjust the HP 8340A (POWER LEVEL) until the power displayed on the HP 8902A reads −30 dBm ±0.05 dB.
13. Disconnect the SMA cable from the power sensor/adapter and connect the cable to the HP 8562A/B IF INPUT.
14. On the HP 8562A/B, press MIXER (INT), 3RD IF AMP, and CAL 3RD AMP GAIN. Wait until the message ADJUSTMENT-DONE appears in the active function block.
15. Press EXT MXR REF CAL on the HP 8562A/B.
16. Use the HP 8562A/B front-panel knob, step keys, or keypad to change the amplitude of the displayed signal until the marker reads 0 dBm ±0.17 dB.
17. Press PREV MENU, STORE DATA, and YES on the HP 8562A/B.
18. Place the WR PROT/ WR ENA jumper on the A2 Controller Assembly in the WR PROT position.

Note The following steps should be performed only if it was necessary to change the conversion loss values found in step 5.

19. Press MIXER (EXT), AMPTD CORRECT, CNVLOSS VS FREQ on the HP 8562A/B.
20. Enter the conversion loss at 18 GHz recorded in Table 2-13.
21. Press (▲) on the HP 8562A/B.
22. Repeat steps 20 and 21 for the remaining frequencies listed in Table 2-13.

16. Second IF Gain Adjustment

Assembly Adjusted

A15 RF Assembly

Related Performance Test

IF Input Amplitude Accuracy

Description

The gain of the Second IF (between A15J801 INT 2nd IF and the third mixer) is set to 12 dB.

Note This adjustment is necessary after replacing either A15A1 Second IF Amplifier or A15U802 2nd IF pad.

Equipment

No test equipment is required for this adjustment procedure.

Procedure

1. Set the HP 8562A/B (LINE) switch OFF, disconnect the power cord, and remove the analyzer's cover. Fold down the A15 RF and A14 Frequency Control assemblies. Prop up the A14 Frequency Control Assembly.
2. Remove the shield covering the Third Converter and A15A1 Second IF Amplifier. See Figure 2-18.
3. Read the gain printed on the A15A1 Second IF Amplifier label. Select a value for A15U802 from Table 2-14 based upon the gain of the Second IF Amplifier.
4. Reinstall the shield on the A15 Assembly.
5. Perform the External Mixer Amplitude Adjustment.

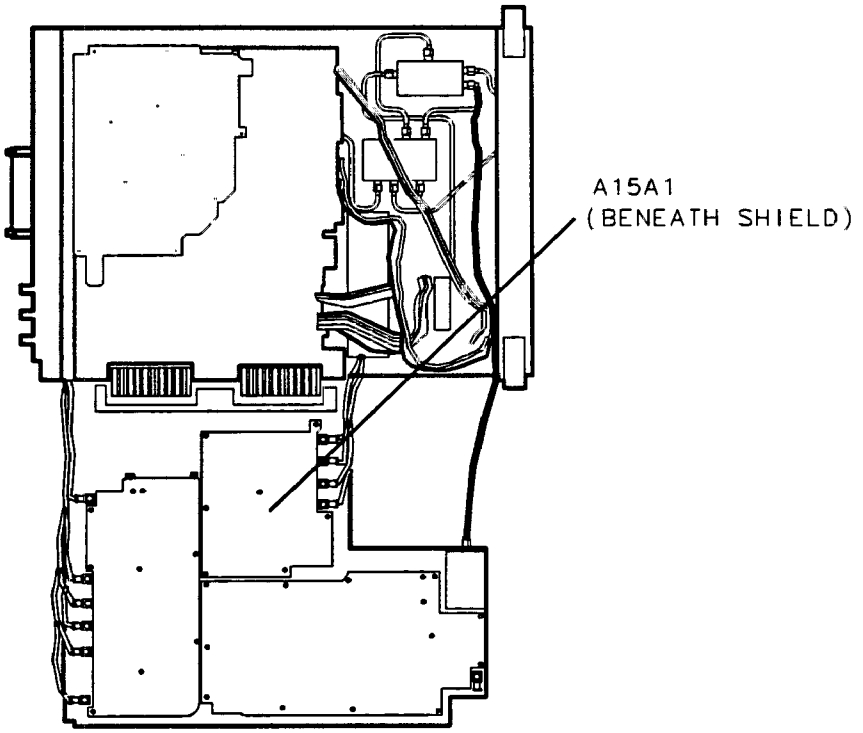

Figure 2-18. Location of A15A1

Note

If the Second IF Input Switch was repaired, there might be insufficient range in the External Mixer Amplitude Adjustment. If this is the case, select a new value for A15U802. Greater attenuation values of U802 will lower the signal amplitude, and lower attenuation values will increase the signal amplitude.

Table 2-14. A15U802 Values

2nd IF Amplifier Gain Range (dB)	U802 Value (dB)	2nd IFA Pad Part Number
13.1 to 14.2	1	0955-0308
14.3 to 15.2	2	0955-0309
15.3 to 16.2	3	0955-0310
16.3 to 17.2	4	0955-0311
17.3 to 18.2	5	0955-0312
18.3 to 19.2	6	0955-0313
19.3 to 20.2	7	0955-0314

17. SIG ID Oscillator Adjustment

Assembly Adjusted

A15 RF Assembly

Related Performance Test

There are no related performance tests for this adjustment procedure.

Description

The frequency range of the 298 MHz SIG ID Oscillator is determined by counting the 10.7 MHz IF as A15C629 is rotated through its range of adjustment. The SIG ID Oscillator is then set to the frequency determined by the following equation:

$$\text{Oscillator frequency} = 298\ \text{MHz} - \left(\frac{\text{Oscillator frequency range}}{4}\right)$$

Equipment

Microwave Frequency Counter ..... HP 5343A
Spectrum Analyzer ..... HP 8566

Adapters
Type N (m) to BNC (f) *(2 required)* ..... HP part number 1250-1476
BNC Tee (f, m, f) ..... HP part number 1250-0781

Cables
BNC, 122 cm (48 in) *(2 required)* ..... HP 10503A
Test Cable, BNC (m) to SMB (f) ..... HP part number 85680-60093

Procedure

1. Set the HP 8562A/B [LINE] switch OFF, disconnect the power cord, and remove the analyzer's cover. Fold down the A15 RF and A14 Frequency Control assemblies. Prop up the A14 Frequency Control Assembly.
2. Connect the HP 8562A/B CAL OUTPUT to the INPUT 50Ω using a Type N-to-BNC adapter. Disconnect cable W29 from A15J601 (10.7 MHz IF out) and connect the SMB end of the test cable to A15J601. Connect the rest of the equipment as shown in Figure 2-19.

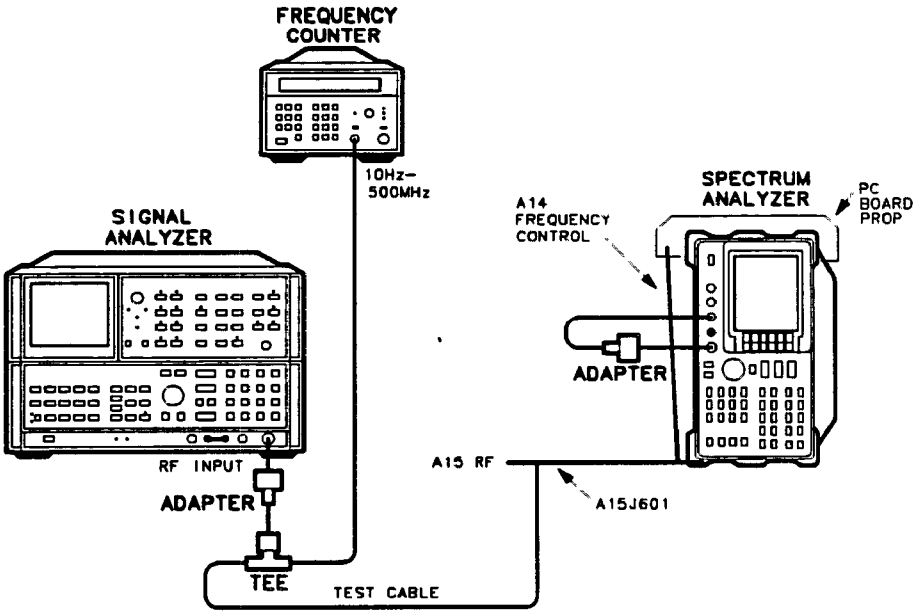

Figure 2-19. Signal ID Oscillator Adjustment Setup

3. Reconnect the power cord and set the (LINE) switch ON. After the power-on sequence has been completed, set the controls as follows:

   CENTER FREQ ..... 300 MHz
   SPAN ..... 0 Hz

4. On the HP 8562A/B, press (INT), SIG ID ON, (TRIG), and SINGLE

5. Press (INSTR PRESET) on the HP 8566 and set the controls as follows:

   CENTER FREQUENCY ..... 10.7 MHz
   FREQUENCY SPAN ..... 200 kHz

6. Set the HP 5343A controls as follows:

   SAMPLE RATE ..... Full Counterclockwise
   50 Ω-1 MΩ SWITCH ..... 50 Ω
   10 Hz-500 MHz/500 MHz-26.5 GHz SWITCH ..... 10 Hz-500 MHz

7. If no signal is displayed on the HP 8566, adjust A15C629 SIG ID until a signal is displayed.

8. Rotate A15C629 SIG ID slightly while observing the HP 8566 display. If the frequency of the displayed signal does not change, press (TRIG) and SINGLE on the HP 8562A/B.

9. While observing the HP 8566 display, adjust A15C629 SIG ID for the highest obtainable frequency with <3 dB decrease in amplitude from maximum. Read this frequency from the frequency counter and record as $F_{3\ dB\ high}$.

$F_{3\ dB\ high}$ = _____ Hz

10. While observing the HP 8566 display, adjust A15C629 SIG ID for the lowest obtainable frequency with <3 dB decrease in amplitude from maximum. Read this frequency from the frequency counter and record as $F_{3\ dB\ low}$.

$F_{3\ dB\ low}$ = _____ MHz

11. Calculate the difference between $F_{3\ dB\ high}$ and $F_{3\ dB\ low}$ and divide results by four. Enter result as F_{OFFSET}.

F_{OFFSET} = _____ kHz

12. Add F_{OFFSET} to $F_{3\ dB\ low}$ recorded in step 10 and record as F_{SIGID}.

F_{SIGID} = _____ MHz

13. Adjust A15C629 for a frequency counter reading of F_{SIGID}. The final adjusted frequency must be 10.7 MHz ±50 kHz.

Note If the 298 MHz SIG ID oscillator is severely mistuned, it might be necessary to widen the span on the HP 8566 to see the shifted sweep.

18. 10 MHz Reference Adjustment (Option 003)

Assembly Adjusted

A21 OCXO Assembly

Note

Replacement oscillators are factory adjusted after a complete warmup and after the specified aging rate has been achieved. Therefore, readjustment should typically not be necessary after oscillator replacement, and is generally not recommended.

Related Performance Test

10 MHz Reference Accuracy (Option 003)

Description

The frequency of the internal 10 MHz frequency reference is compared to a known frequency standard and adjusted for minimum frequency error. This procedure does not adjust the short-term stability or long-term stability of the A21 10 MHz Ovenized Crystal Oscillator (OCXO), which are determined by characteristics of the particular oscillator and the environmental and warmup conditions to which it has been recently exposed. The spectrum analyzer must be ON continuously for at least 24 hours immediately prior to oscillator adjustment to allow both the temperature and frequency of the oscillator to stabilize.

Equipment

Frequency Standard ..... Any 10 MHz frequency standard with frequency accuracy of $< \pm 1 \times 10^{10}$, such as the HP 5061B Cesium Beam Standard

Frequency Counter ..... HP 5334A/B

Cable
BNC, 122 cm (48 in)*(2 required)* HP10503A

Procedure

Note

The spectrum analyzer must be ON continuously for at least 24 hours immediately prior to oscillator adjustment to allow both the temperature and frequency adjustment of the oscillator to stabilize. Failure to allow sufficient stabilization time could result in oscillator misadjustment.

1. Set the (LINE) switch of the spectrum analyzer to ON. After the automatic power-on adjustment sequence is complete, press (PRESET) to ensure that the frequency reference is set to internal.
2. Allow the spectrum analyzer to remain powered ON and undisturbed for at least 24 hours, so both the temperature and frequency of the A21 OCXO can stabilize.

3. Connect the frequency standard to the frequency counter rear-panel TIMEBASE IN/OUT connector as shown in Figure 2-20.

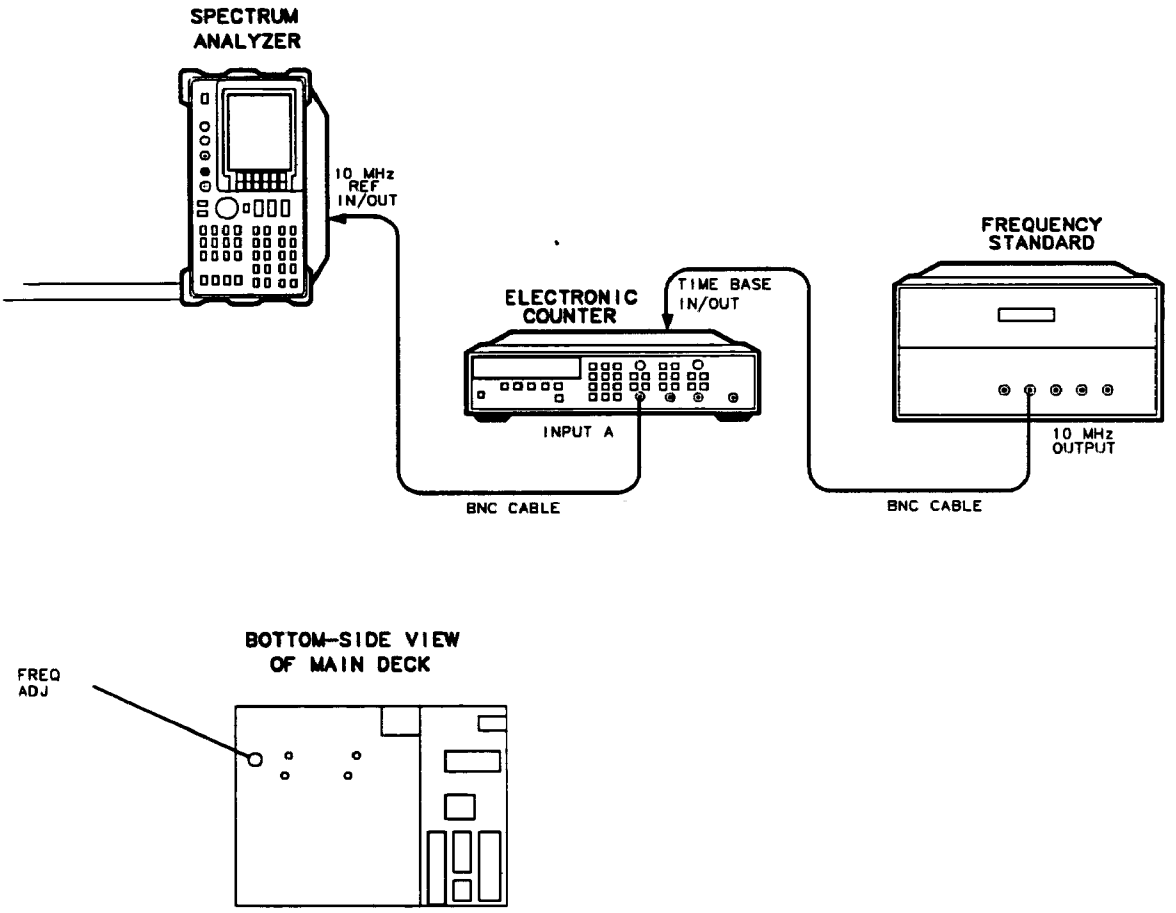

Figure 2-20. 10 MHz Reference Adjustment (Option 003) Setup

4. Connect a BNC cable between the 10 MHz REF IN/OUT jack on the spectrum analyzer rear panel and INPUT A on the frequency counter.

5. Set the frequency counter controls as follows:

FUNCTION/DATA ..... FREQ A
INPUT A:
×10 ATTN ..... OFF
AC ..... OFF (DC coupled)
50ΩZ ..... OFF (1 MΩ input impedance)
AUTO TRIG ..... ON
100 kHz FILTER A ..... OFF
INT/EXT switch (rear panel) ..... EXT

6. On the frequency counter, select a 1 second gate time by pressing [GATE TIME], 1 [GATE TIME]. Offset the displayed frequency by −10.0 MHz by pressing MATH [SELECT/ENTER], [CHS/EEX], 10 [CHS/EEX], 6 [SELECT/ENTER], [SELECT/ENTER]. The frequency

counter should now display the difference between the frequency of the INPUT A signal and 10.0 MHz, with a displayed resolution of 10 mHz (0.010 Hz).

7. Locate the FREQ ADJ control. This control is accessible through the center deck of the spectrum analyzer. See Figure 2-20. Remove the dust cap screw.
8. Use a nonconductive adjustment tool to adjust the FREQ ADJ control on the A21 OCXO for a frequency counter indication of 0.00 Hz.
9. On the frequency counter, select a 10 second gate time by pressing (GATE TIME), 10 (GATE TIME). The frequency counter should now display the difference between the frequency of the INPUT A signal and 10.0 MHz, with a resolution of 1 mHz (0.001 Hz).
10. Wait a least two gate periods for the frequency counter to settle, and then adjust the FREQ ADJ control on the A21 OCXO for a stable frequency counter indication of 0.000 ±0.010 Hz.
11. Replace the dust cap screw on the A21 OCXO.

3

Assembly Replacement

This chapter describes the removal and replacement of all major assemblies. The following replacement procedures are provided:

	Page
Access to Internal Assemblies	3-2
Cable Color Code	3-2
1. Analyzer Cover	3-3
2. A1 Front Frame/A18 CRT	3-4
3. A1A1 Keyboard Assembly/Front Panel Keys	3-10
4. A1A2 RPG	3-12
5. A2, A3, A4, and A5 Assemblies	3-13
6. A6 Power Supply	3-18
7. A6A1 High Voltage Assembly	3-21
8. A7 through A13 Assemblies	3-24
A7 First LO Distribution Amplifier	3-27
A8 Dual Mixer	3-28
A9 Input Attenuator	3-29
A10 YTF	3-30
A11 YTO	3-32
A12 RF Switch	3-33
A13 Second Converter	3-34
9. A14 and A15 Assemblies	3-35
10. A16 CAL Oscillator/A17 CRT Display Driver	3-38
11. B1 Fan	3-40
12. BT1 Battery	3-41
13. Rear Frame/Rear Dress	3-42
14. W3 Line-Switch Cable	3-45
15. EEROM (A2U501)	3-51
16. A21 OCXO (Option 003)	3-52

Tools required to perform the procedures are listed in Table 3-1.

The words *right* and *left* are used throughout the replacement procedures to indicate the sides of the spectrum analyzer as normally viewed from the operating position.

Numbers in parentheses are used throughout the replacement procedures to indicate numerical callouts on the figures.

Caution The spectrum analyzer contains static-sensitive components. Read the section entitled "Electrostatic Discharge Information" in Chapter 1.

Access to Internal Assemblies

Servicing the HP 8562A/B requires the removal of the spectrum analyzer's cover assembly and the folding down of six board assemblies. Four of these assemblies lay flat along the top of the analyzer and two lay flat along the bottom of the analyzer. All six assemblies are attached to the analyzer's right-side frame using hinges and fold out of the analyzer allowing access to all major assemblies. See Figure 3-1.

- To remove the analyzer's cover assembly, refer to Procedure 1.
- To access the A2, A3, A4, and A5 assemblies, refer to Procedure 5.
- To access the A14 and A15 assemblies, refer to Procedure 9.

Cable Color Code

Coaxial cables and wires will be identified in the procedures by reference designation, or name, followed by a color code. The code is identical to the resistor color code. The first number indicates the base color with second and third numbers indicating any colored stripes. For example, W23, coax 93, indicates a white cable with an orange stripe.

Table 3-1. Required Tools

Description	HP Part Number
5/16-inch open-end wrench	8720-0015
3 mm hex (Allen) wrench	8710-1366
4 mm hex (Allen) wrench	8710-1164
No. 6 hex (Allen) wrench	5020-0289
7 mm nut driver	8710-1217
3/8-inch nut driver	8720-0005
7/16-inch nut driver	8720-0006
9/16-inch nut driver (drilled out, end covered with heatshrink tubing)	8720-0008
Small #1 Posi-drive screwdriver	8710-0899
Large #2 Posi-drive screwdriver	8710-0900
Long-nose pliers	8710-0030
Wire cutters	8710-0012

Procedure 1. Analyzer Cover

Removal/Replacement

1. Disconnect the line-power cord, and place the analyzer on its front panel.
2. Loosen the four rear-bumper screws, using a 4 mm hex wrench. Pull the cover assembly off towards the rear of the instrument.

Caution When replacing the analyzer's cover, use caution to avoid damaging any cables.

3. When installing the cover assembly, be sure to locate the cover's air vent holes on the bottom side of the analyzer. Attach with the four screws loosened in step 2, and tighten the four screws gradually to ensure that the cover is seated in the front-frame gasket groove.
4. Torque each screw to 40 to 50 inch-pounds.

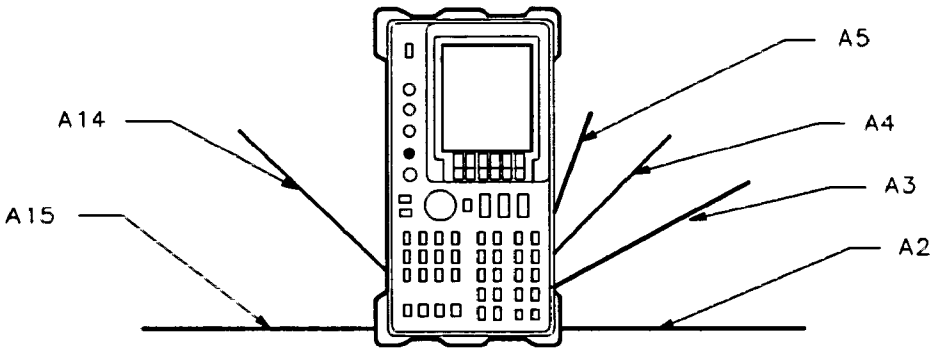

Figure 3-1. Hinged Assemblies

Procedure 2. A1 Front Frame/A18 CRT

Removal

Warning **Due to possible contact with high voltages, disconnect the analyzer's line-power cord before performing this procedure.**

1. Remove the analyzer's cover assembly as described in Procedure 1, "Analyzer Cover."
2. Fold out the A2, A3, A4, and A5 assemblies as described in Procedure 3, "A1A1 Keyboard Assembly/Front Panel Keys Removal," steps 2 through 6.
3. Disconnect A1A1W1 from A3J602.
4. Place the analyzer top-side-up on the work bench.

Warning **The voltage potential at A6A1W3 is +9 kV. Disconnect at the CRT with caution! Failure to discharge A6A1W3 may result in *severe electrical shock* to personnel and damage to the instrument.**

5. Using a small screwdriver with the shank in contact with the CRT shield assembly, slip the tip of the screwdriver under the A6A1W3 post-accelerator cable's rubber shroud and short the cable to ground on the CRT shield assembly. See Figure 3-2.
6. Pry out the black grommet protecting post-accelerator cable A6A1W3 from the CRT shield assembly. See Figure 3-2.
7. Carefully unsnap the A6A1W3 post-accelerator cable from the CRT and discharge it by shorting the cable to chassis ground on the CRT shield assembly. See Figure 3-2.
8. Place the analyzer on its right-side frame with the front-frame assembly hanging over the front edge of the work bench.
9. Fold out the A14 and A15 assemblies as described in Procedure 9, "A14 and A15 Assemblies Removal," steps 3 and 4.

Warning

The voltage potential at A6A1W3 is +9 kV. Disconnect the analyzer's line-power cord before performing this procedure. Failure to discharge A6A1W3 correctly may result in *severe electrical shock* to personnel and damage to the instrument.

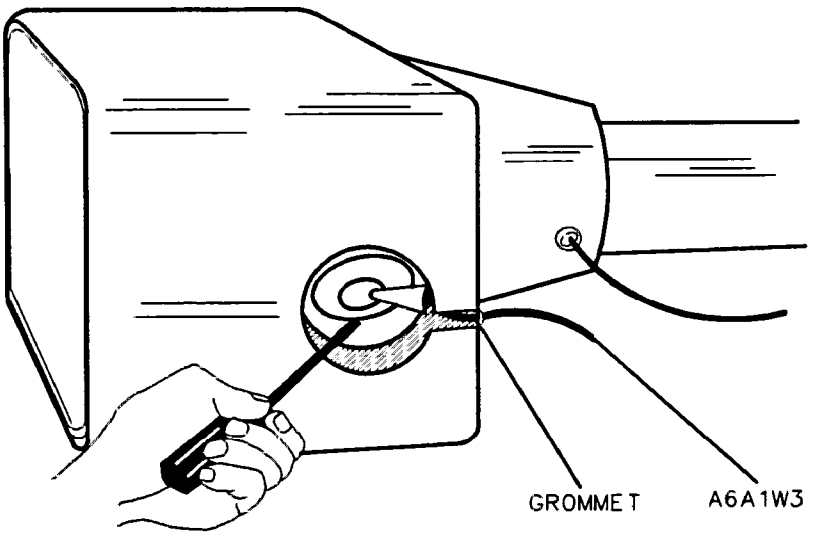

Figure 3-2. Grounding the Post-Accelerator Cable

Note

Early versions of HP 8562A/B Spectrum Analyzers were shipped with the A9 Input Attenuator oriented with the ribbon cable connector near the right side frame. Replacing the A9 Input Attenuator with the ribbon cable connector near the INPUT 50Ω connector will result in improved VSWR performance. A new, longer attenuator-drive ribbon-cable assembly (HP part number 5062-0741) will be required if the attenuator orientation is changed.

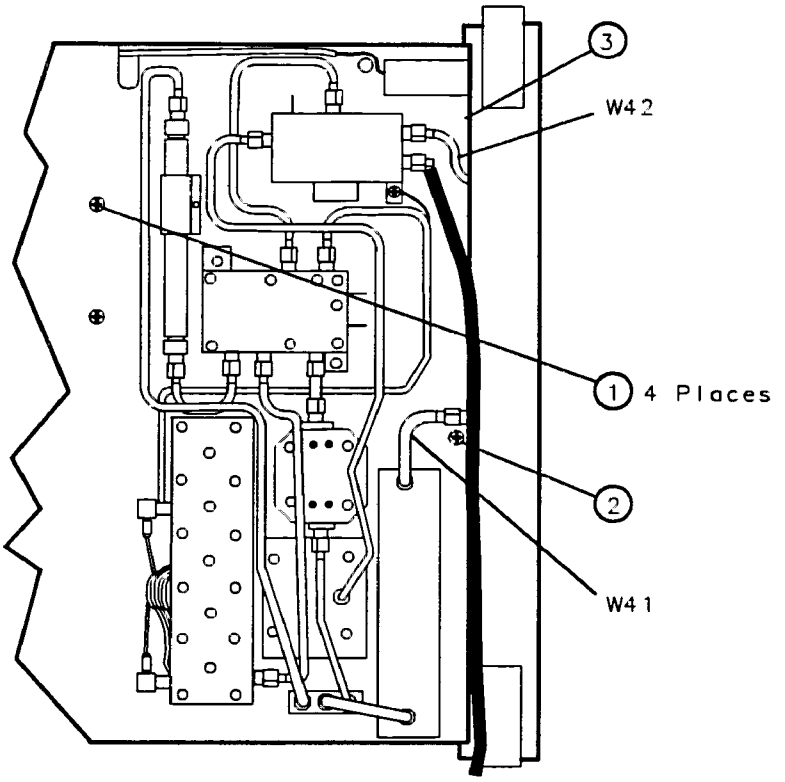

Figure 3-3. A9, A18, and Line-Switch Assembly Mounting Screws

10. Remove screw (2) securing the A9 Input Attenuator Assembly to the center support on the front frame. See Figure 3-3.
11. Use a 5/16 inch open-end wrench to disconnect W41 from the front-panel RF INPUT connector. Loosen the opposite end of W41.
12. Remove W42 and disconnect W36, coax 86, from the front-panel IF INPUT connector.
13. Use a 9/16 inch nut driver to remove the dress nut holding the front-panel CAL OUTPUT connector to the front panel. If necessary, drill out the nut driver to fit over the BNC connectors and cover the tip with heatshrink tubing or tape to avoid scratching the enameled front panel.
14. Remove screw (3) securing the line-switch assembly to the front frame. See Figure 3-3.
15. Gently remove the line-switch assembly, using caution to avoid damaging A1W1 and power indicator LED A1W1DS1.
16. Remove A1W1 and A1W1DS1 from the line-power switch assembly.
17. Remove the three screws (1) securing the front-frame assembly to the analyzer's right-side frame. See Figure 3-4.

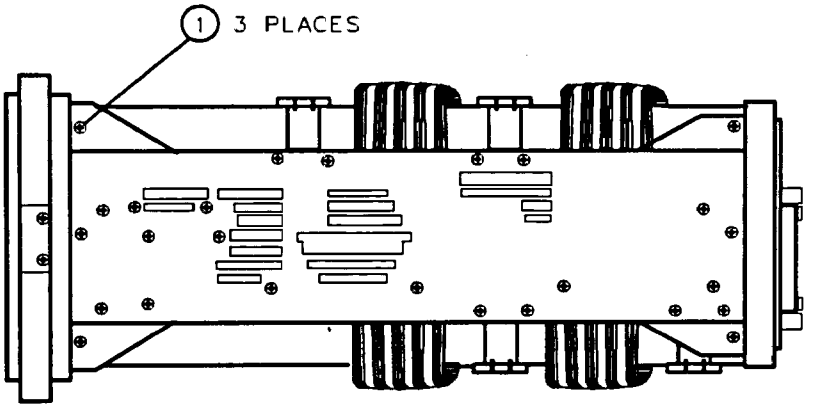

Figure 3-4. Front-Frame Mounting Screws

18. Remove the three screws securing the front-frame assembly to the analyzer's left-side frame.
19. Loosen, but do not remove, four screws (1) (Figure 3-3) clamping A18 CRT Assembly.
20. Pull the cable tie (1) to free W9. See Figure 3-5. Gently pry W9, the CRT cable, from the end of the CRT assembly.
21. Remove the A1 front frame assembly and set it aside. If necessary, hold the A17 CRT assembly to keep it from moving out with the A1 assembly.
22. Pull the CRT assembly forward and away from the spectrum analyzer one or two inches and disconnect A18W1 (the trace align wires) from A17J5.
23. Remove the CRT assembly from the spectrum analyzer.
24. Gently pull the CRT assembly off of the front-frame assembly.

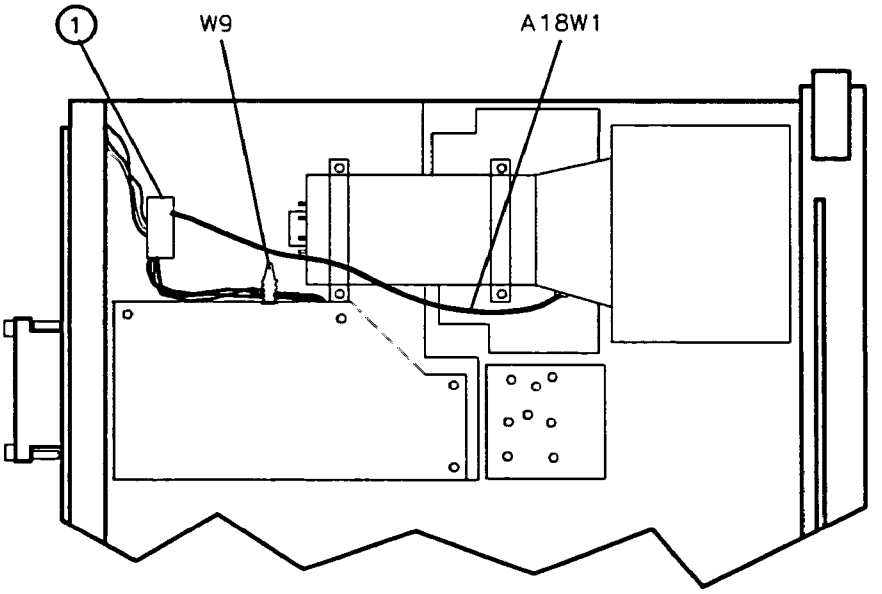

Figure 3-5. Installing the CRT and Front-Frame Assemblies

Replacement

Note

Use care when handling the glass CRT EMI shield. The glass may be cleaned using thin-film cleaner (HP part number 8500-2163) and a lint-free cloth. When installing the glass shield, face the side of the glass with the silver coated edge towards the inside of the analyzer.

1. Place the analyzer on its right-side frame with the front end extending slightly over the front of the work bench.
2. Gently place the A18 CRT Assembly into the A1 Front Frame Assembly as illustrated in Figure 3-6.
3. Place the front-frame and CRT assemblies into the analyzer, using caution to avoid pinching any cables.
4. Dress the A18W1 trace-align wires between the CRT assembly mounts and the A6 Power Supply top shield.

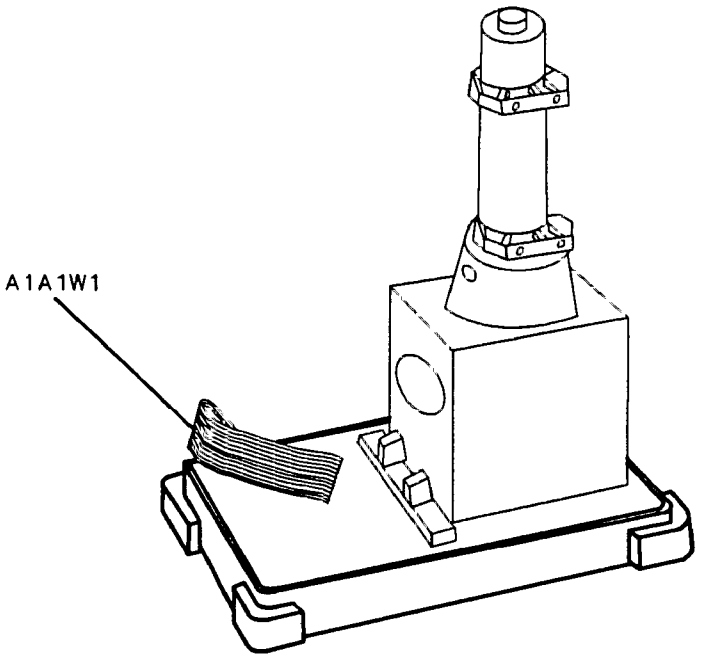

Figure 3-6. Placing the CRT into the Front Frame

5. Connect A18W1 to A17J5.
6. Snap CRT cable W9 onto the end of the CRT assembly.
7. Fully seat the front frame and CRT assemblies into the analyzer.
8. Secure the front frame to the analyzer's side frames, using three flathead screws per side. See Figure 3-4.
9. Retighten the four screws clamping the CRT assembly.

10. Place W9 between the CRT assembly and the A6 Power Supply top shield so that the W9 wires are below the surface of the top shield.
11. Connect W42 to A7J3 and the front-panel 1ST LO OUTPUT connector.
12. Use a 9/16 inch nut driver to connect CAL OUTPUT cable W40, coax 89, to the front panel.
13. Connect W36, coax 86, to the front-panel IF INPUT connector.
14. Use a 5/16 inch wrench to connect W41 from the A9 Input Attenuator to the front-panel INPUT 50Ω connector. Make sure that W40, W36, and A1W1 are routed between W41 and the attenuator bracket. Secure the A9 Input Attenuator bracket to the center support on the front frame using one panhead screw.
15. Place led A1W1DS1 into the line-power switch assembly.
16. Attach the line switch assembly into the front frame using one panhead screw. Be sure to connect the line- power switch ground lug with the screw. The screw is captive.
17. Fold up the A14 and A15 assemblies as described in Procedure 9, "A14 and A15 Assemblies Replacement," steps 3 through 5.
18. Place the analyzer top-side-up on the work bench and connect A1A1W1 to A3J602.
19. Snap post-accelerator cable A6A1W3 to the A18 CRT assembly.
20. Snap the black grommet protecting the A6A1W3 into the CRT shield.
21. Fold up assemblies A2, A3, A4, and A5 as described in Procedure 5, "A2, A3, A4, and A5 Assemblies Replacement," steps 6 through 12.
22. Replace the analyzer's cover assembly.
23. Connect the line-power cord and switch the analyzer's power on. If the display does not operate properly, turn off analyzer power, disconnect the line cord, and recheck the analyzer.

Procedure 3. A1A1 Keyboard/Front Panel Keys

Removal

1. Remove the front frame from the analyzer as described in Procedure 2, "A1 Front Frame/A18 CRT."
2. Place the front frame face-down on the bench and remove the front-frame center support.
3. Disconnect A1W1 from A1A1J3 and the RPG cable from A1A1J2.
4. Remove the nine screws holding the A1A1 Keyboard Assembly to the front frame and remove the assembly. Be careful to keep the front frame level. All front-panel keys will now be loose and held in place only by gravity.
5. Remove the rubber keypad.

Note

The front-panel softkey actuators are part of the CRT bezel assembly and are not replaceable. Should the softkeys become damaged, replace the bezel assembly.

Replacement

1. Check that all front-panel keys are correctly placed in the front-frame assembly. Figure 3-7 illustrates the positions of all keys as viewed from the backside of the front panel. Make sure the indented orientation mark located on the back of each key is next to the raised marks located in the front-frame casting next to each key.
2. Place the rubber keypad over the keys, ensuring that the screw holes are visible through the pad.
3. Place the A1A1 Keyboard Assembly over the rubber keypad. Secure with nine panhead screws.
4. Connect the RPG cable to A1A1J2, and A1W1 to A1A1J3.
5. Secure the center support to the front frame using two panhead screws. The arrow stamped on the center support should point to the top of the frame.
6. Install the front-frame assembly as described in Procedure 2, "A1 Front Frame/A18 CRT."

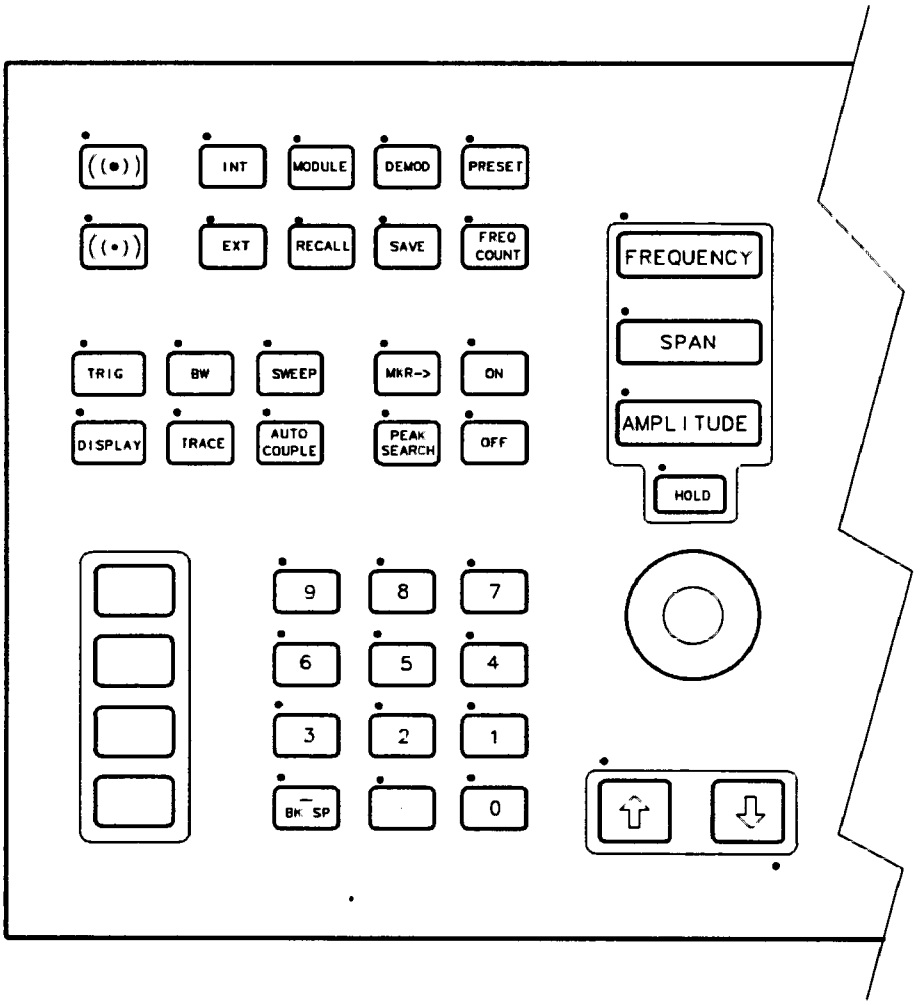

Figure 3-7. Key Positions As Viewed from Inside

Procedure 4. A1A2 RPG

Removal

1. Remove the A9 Input Attenuator as described in Procedure 8, "A7 through A13 Assemblies."
2. Disconnect the RPG cable from the A1A1 keyboard assembly.
3. Remove the front-panel RPG knob using a no. 6 hex (Allen) wrench. Use a 7/16 inch nut driver to remove the nut holding the RPG shaft to the front panel.
4. Remove the RPG.

Replacement

1. Place the RPG into the front frame with the cable facing the bottom of the analyzer. Place a lock washer and nut on the RPG shaft to hold it in the frame.
2. Use a 7/16 inch nut driver to secure the RPG assembly to the front frame.
3. Connect the RPG cable to A1A1J2.
4. Attach the RPG knob using a no. 6 hex (Allen) wrench.
5. Replace the A9 Input Attenuator as described in Procedure 8, "A7 through A13 Assemblies."

Procedure 5. A2, A3, A4, and A5 Assemblies

Removal

1. Remove the analyzer's cover.
2. Place the analyzer on its right side frame.
3. Remove the eight screws holding the A2, A3, A4, and A5 assemblies to the top of the analyzer. These screws are labeled 2, 3, and 4 in Figure 3-8. They are also labeled on the back of the A2 board assembly.
4. Remove ribbon cable W4 from A2J6. See Figure 3-8.

Caution Do not fold the board assemblies out of the analyzer one at a time. Always fold the A2 and A3 assemblies as a unit and the A4 and A5 assemblies as a unit. Folding out one assembly at a time binds the hinges attaching the assemblies and may damage an assembly and hinge.

5. The board assemblies are attached to the analyzer's right-side frame with two hinges. Fold both the A2 and A3 assemblies out of the analyzer as a unit.
6. Fold both the A4 and A5 assemblies out of the analyzer as a unit.
7. Remove the cables from the assembly being removed, as illustrated in Figure 3-9.
8. Remove the two screws that attach the assembly being removed to its two mounting hinges.

Caution Do not torque shield screws to more than 5 inch-pounds. Applying excessive torque will cause the screws to stretch.

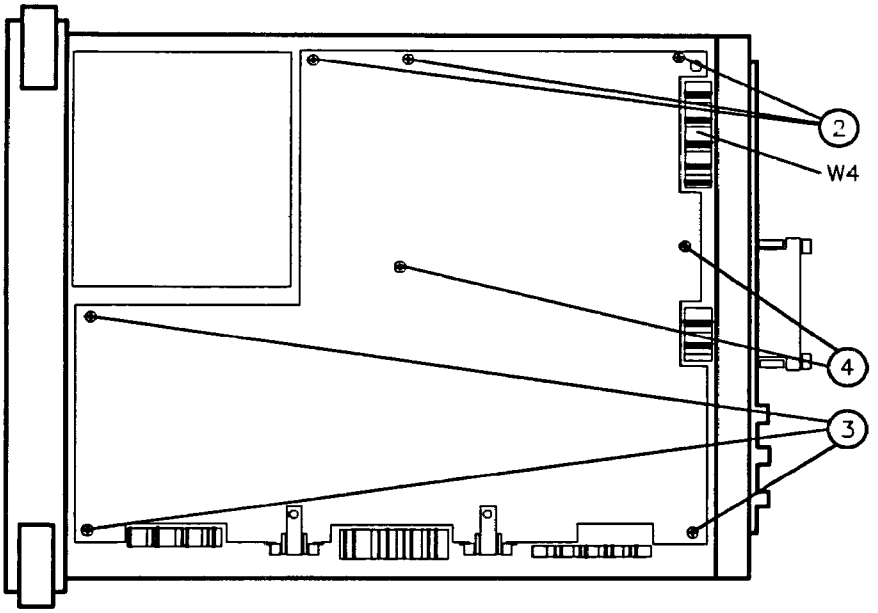

Figure 3-8. A2, A3, A4, and A5 Assembly Removal

Replacement

1. Place the analyzer top-side-up on the work bench.
2. Attach the assembly being installed to the two chassis hinges with two panhead screws.
3. Leave the assembly in the folded-out position and attach ribbon cables W1 and W2.
4. Attach all coaxial cables to the assembly, as illustrated in Figure 3-9.
5. Locate the cable clip on the inside of the right-side frame. Make sure that the coaxial cables are routed properly on the clip as illustrated in Figure 3-10.
6. Lay the A2, A3, A4, and A5 assemblies flat against each other in the folded-out position. Make sure that no cables become pinched between the two assemblies.

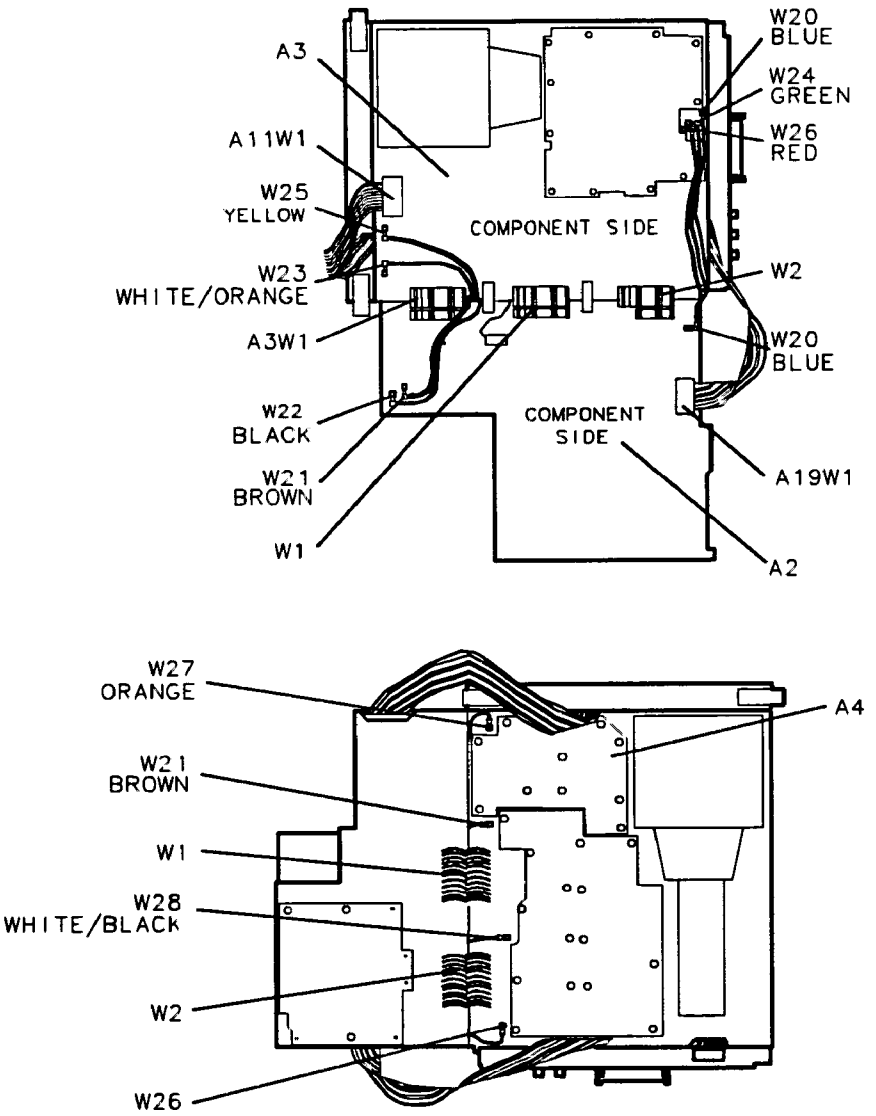

Figure 3-9. Assembly Cables (1 of 2)

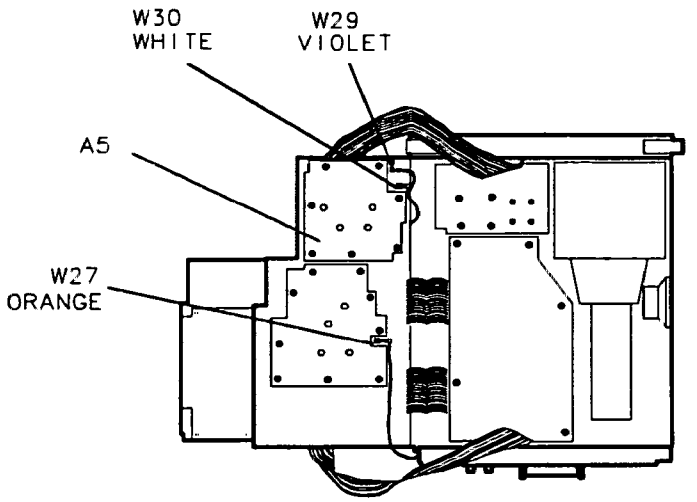

Figure 3-9. Assembly Cables (2 of 2)

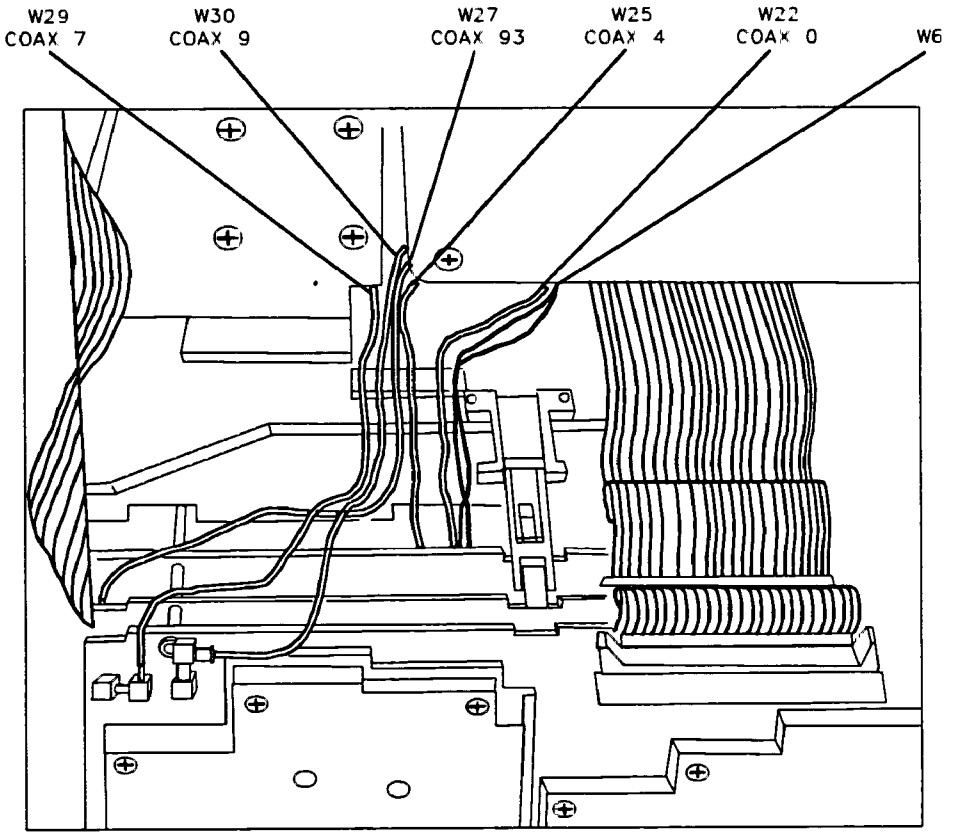

Figure 3-10. Coaxial Cable Clip

7. Check to ensure that no cables will become pinched under the hinges when folding up the A4 and A5 assemblies.
8. Fold the A4 and A5 assemblies together as a unit into the analyzer. Use caution to avoid damaging any cable assemblies.

9. Fold the A2 and A3 assemblies together as a unit into the analyzer. Be sure to fold HP-IB cable A19W1 between the A3 and A4 assemblies, using the two sets of hook and loop fasteners. See Figure 3-11.
10. Fold ribbon cable A1A1W1 between A3 and A4 assemblies. Take care to dress the protective tubing as close to A3J602 connector as possible, so that the tubing does not fold with the cable.See Figure 3-11.
11. Attach ribbon cable W4 to A2J6 while folding up the assemblies. See Figure 3-8.
12. Secure the assemblies using the eight screws removed in "Removal" step 3. Place a flat washer on each screw. The screw sizes and quantities are listed below. Numbers in parentheses match placement identification numbers on Figure 3-8.

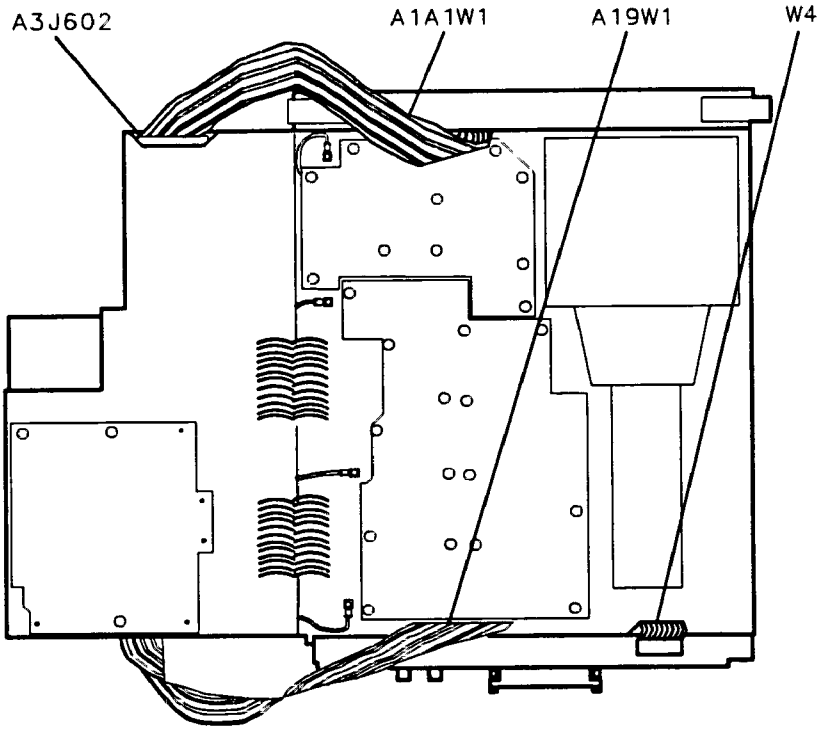

Figure 3-11. HP-IB and A1A1 W1 Cable Placement

Procedure 6. A6 Power Supply

Removal

Warning **The A6 power supply and A6A1 High Voltage Assemblies contain lethal voltages with lethal currents in all areas. Use extreme care when servicing these assemblies. Always disconnect the power cord from the instrument before beginning this replacement procedure. Failure to follow this precaution can represent a shock hazard which may result in personal injury.**

1. Disconnect the power cord from the analyzer.
2. Remove the analyzer's cover assembly. Refer to Procedure 1, "Analyzer Cover."
3. Fold out the A2, A3, A4, and A5 assemblies as described in Procedure 5, "A2, A3, A4, and A5 Assemblies Removal," steps 2 through 6.
4. Place the analyzer top-side-up on the work bench.

Warning **The voltage potential at A6A1W3 is +9 kV. Disconnect at the CRT with caution! Failure to discharge A6A1W3 may result in *severe electrical shock* to personnel and damage to the instrument.**

5. Using a small screwdriver with the shank in contact with the CRT shield assembly, slip the tip of the screwdriver under the A6A1W3 post-accelerator cable's rubber shroud and short the cable to ground on the CRT shield assembly. See Figure 3-2.
6. Pry out the black grommet protecting post-accelerator cable A6A1W3 from the CRT shield assembly.
7. Remove the three screws securing the power supply shield to the power supply and remove the shield. On some instruments, one screw uses a flat washer.
8. Remove the three screws and washers securing the A6A1 High Voltage Assembly to the A6 Power Supply Assembly.
9. Disconnect ribbon cable A6A1W1 from A6J5 and lift the A6A1 Assembly out of the way.
10. Disconnect all cables from the A6 Power Supply Assembly.
11. Use a screwdriver to remove three standoffs from the A6 Power Supply Assembly.
12. Remove the A6 Power Supply Assembly.

Replacement

1. Attach the A6 Power Supply Assembly to the analyzer's chassis using the three standoff screws.
2. Connect W1 to A6J1, W3 to A6J2, fan power wires to A6J3, W8 to A6J4, and the line-power jack to A6J101. See Figure 3-12.
3. Secure the A6A1 High Voltage Assembly to the A6 Power Supply, using three panhead screws and washers. Connect ribbon cable A6A1W1 to A6J5.
4. Snap post-accelerator cable A6A1W3 to the CRT assembly.

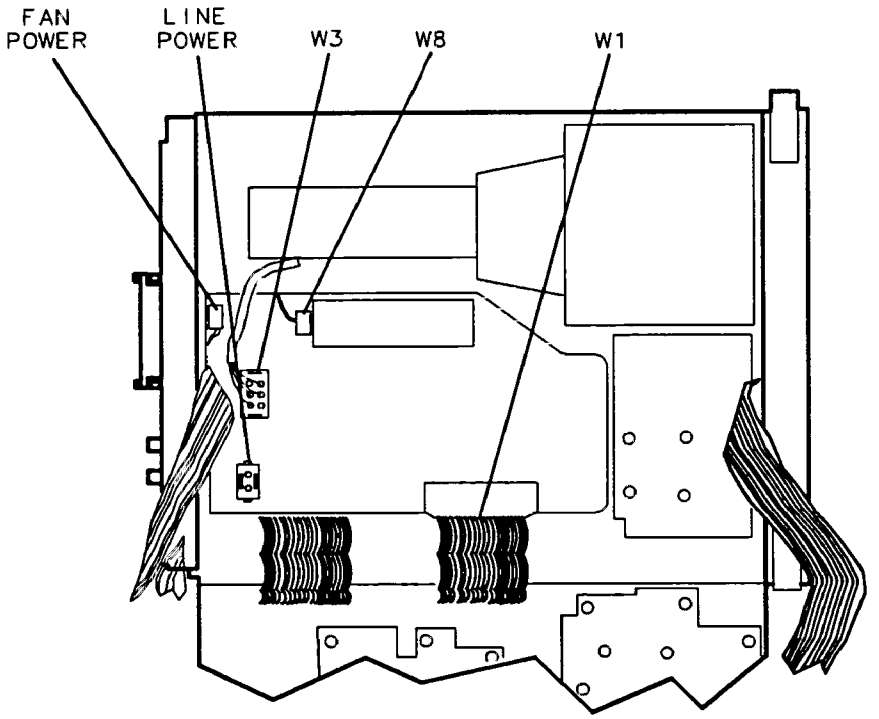

Figure 3-12. A6 Power Supply Connections

5. Place the black grommet protecting the post-accelerator cable into the CRT shield.
6. Ensure that all cables are safely routed and will not be damaged when securing the A6 cover.
7. Secure the power supply cover shield to the power supply using three flathead screws (1). See Figure 3-13. On some instruments a flat washer is used with one of the screws. If one of the screws removed had a flat washer with it, then replace it as shown in Figure 3-13. One end of the cover fits into a slot provided in the rear frame assembly.
8. Fold the A2, A3, A4, and A5 assemblies into the analyzer as described in Procedure 5, "A2, A3, A4, and A5 Assemblies Replacement," steps 6 through 12.

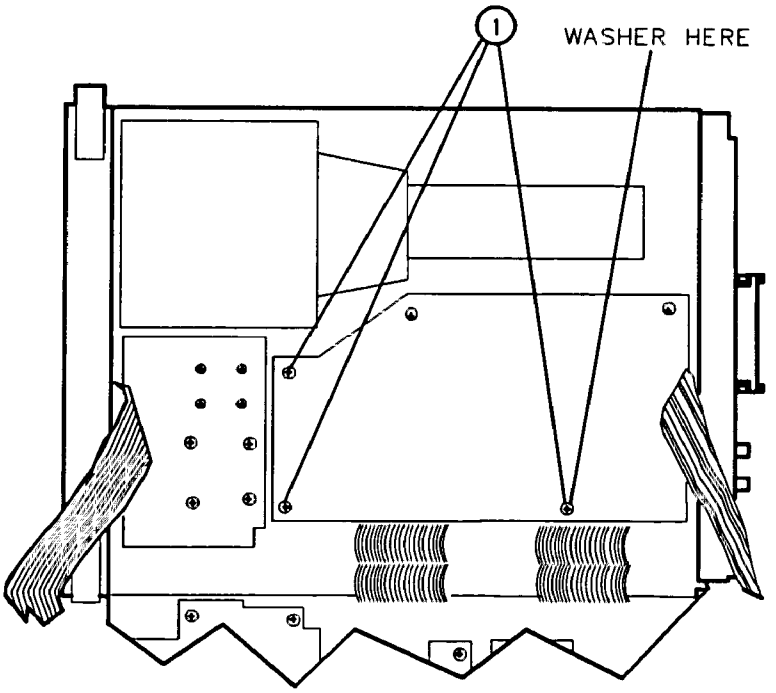

Figure 3-13. A6 Power Supply Cover

Procedure 7. A6A1 High Voltage Assembly

Removal

Warning **The A6 Power Supply and A6A1 High Voltage assemblies contain lethal voltages with lethal currents in all areas. Use extreme care when servicing these assemblies. Always disconnect the power cord from the instrument before beginning this replacement procedure. Failure to follow this precaution can represent a shock hazard which may result in personal injury.**

1. Disconnect the power cord from the analyzer.
2. Remove the analyzer's cover assembly.
3. Fold out the A2, A3, A4, and A5 assemblies as described in Procedure 5, "A2, A3, A4, and A5 Assemblies."
4. Place the analyzer top-side-up on the work bench.

Warning **The voltage potential at A6A1W3 is +9 kV. Disconnect at the CRT with caution! Failure to discharge A6A1W3 may result in *severe electrical shock* to personnel and damage to the instrument.**

5. Using a small screwdriver with the shank in contact with the CRT shield assembly, slip the tip of the screwdriver under the A6A1W3 post-accelerator cable's rubber shroud and short the cable to ground on the CRT shield assembly. See Figure 3-2.
6. Pry out the black grommet protecting post-accelerator cable A6A1W3 from the CRT shield assembly.
7. Remove the three screws securing the power supply shield to the power supply and remove the shield. On some instruments, one screw uses a flat washer.
8. Remove the three screws and washers securing the A6A1 High Voltage Assembly to the A6 Power Supply Assembly.
9. Disconnect ribbon cable A6A1W1 from A6J5.
10. Remove the two screws (1) securing two board-mounting posts to the left-side frame and remove the posts. See Figure 3-14.
11. Remove the two left-side frame screws (2) securing the A16 and A17 assemblies.
12. Lift up the A16 Cal Oscillator Assembly and swing it out of the analyzer. Do not remove any cables.
13. Lift up the A17 CRT driver assembly and disconnect A6A1W2 from A17J6. Do not remove any other cables from the A17 Assembly.
14. Disconnect the tie wraps from the A6A1 Assembly cables and remove the A6A1 High Voltage Assembly from the analyzer.

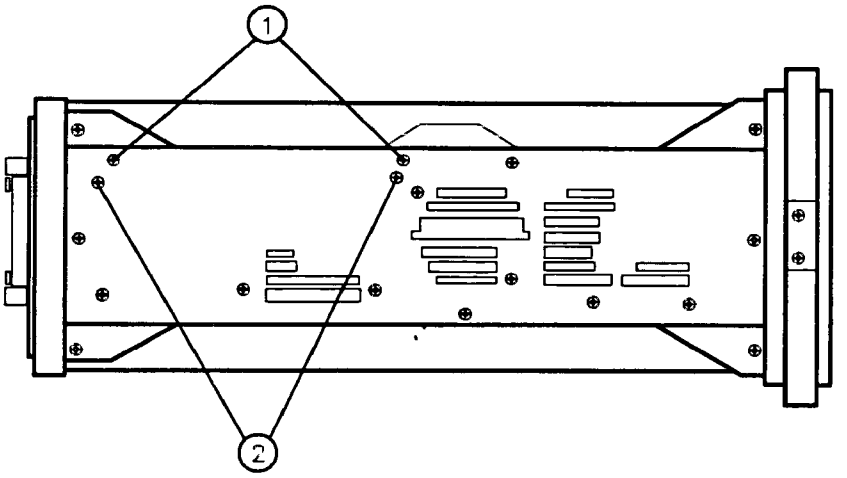

Figure 3-14. A17 CRT Driver Mounting Screws

Replacement

1. Secure the A6A1 High Voltage Assembly to the A6 Power Supply using three panhead screws and washers. Connect ribbon cable A6A1W1 to A6J5.
2. Snap post-accelerator cable A6A1W3 to the CRT assembly.
3. Place the black grommet protecting the post-accelerator cable into the CRT shield.
4. Ensure that all cables are safely routed and will not be damaged when securing the A6 cover.
5. Secure the power-supply cover shield to the power supply using three flathead screws (1). See Figure 3-13. On some instruments, a flat washer is used with one of the screws. If one of the screws removed had a flat washer with it, then replace it as shown in Figure 3-13. One end of the cover fits into a slot provided in the rear frame assembly.
6. Connect A6A1W2 to A17J6.
7. Place the A17 CRT Driver Assembly into the center-deck mounting slot nearest the CRT. Use caution when routing cables to avoid damage.
8. Place the A16 Cal Oscillator Assembly into the center-deck mounting slot nearest the left-side frame. Figure 3-15 shows the left-side frame removed so that proper A16 Assembly cable routing may be viewed.
9. Secure the A16 and A17 assemblies with the two flathead screws removed in "Removal" step 11. See Figure 3-14.
10. Connect the two mounting posts to the left-side frame using the two screws removed in "Removal" step 10.
11. Fold the A2, A3, A4, and A5 assemblies into the analyzer and secure the analyzer cover assembly as described in Procedure 5, "A2, A3, A4, and A5 Assemblies."

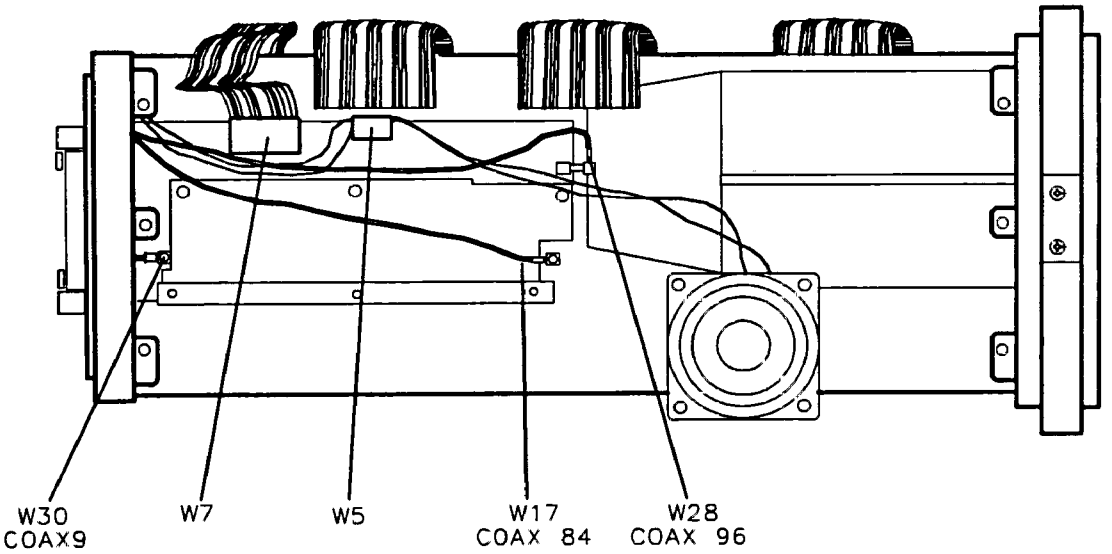

Figure 3-15. A16 Cable Routing

Procedure 8. A7 through A13 Assemblies

A separate replacement procedure is supplied for each assembly listed below. Before beginning a procedure, do the following:

- Fold out the A14 and A15 assemblies as described in Procedure 9, "A14 and A15 Assemblies."
- If the A10 YTF (HP 8562A) or A11 YTO assemblies are being removed, also fold down the A2, A3, A4, and A5 assemblies as described in Procedure 5, "A2, A3, A4, and A5 Assemblies."

A7 First LO Distribution Amplifier
A8 Dual Mixer
A9 Input Attenuator
A10 YTF (HP 8562A Analyzers)
A11 YTO
A12 RF Switch
A13 Second Converter

Figure 3-16 illustrates the location of the assemblies and Figure 3-17 provides the colors and locations of the assembly bias wires.

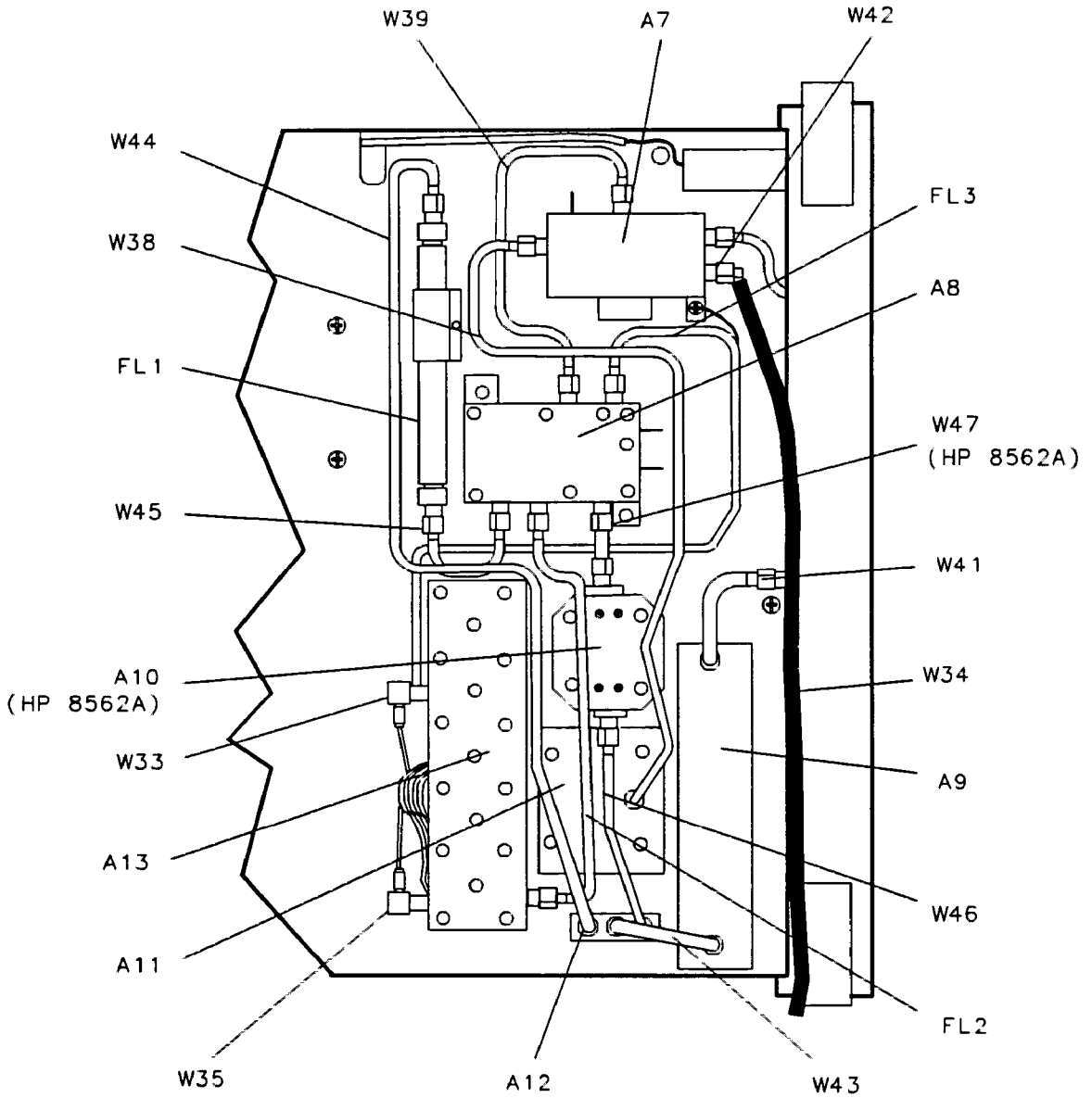

Figure 3-16. Assembly Locations

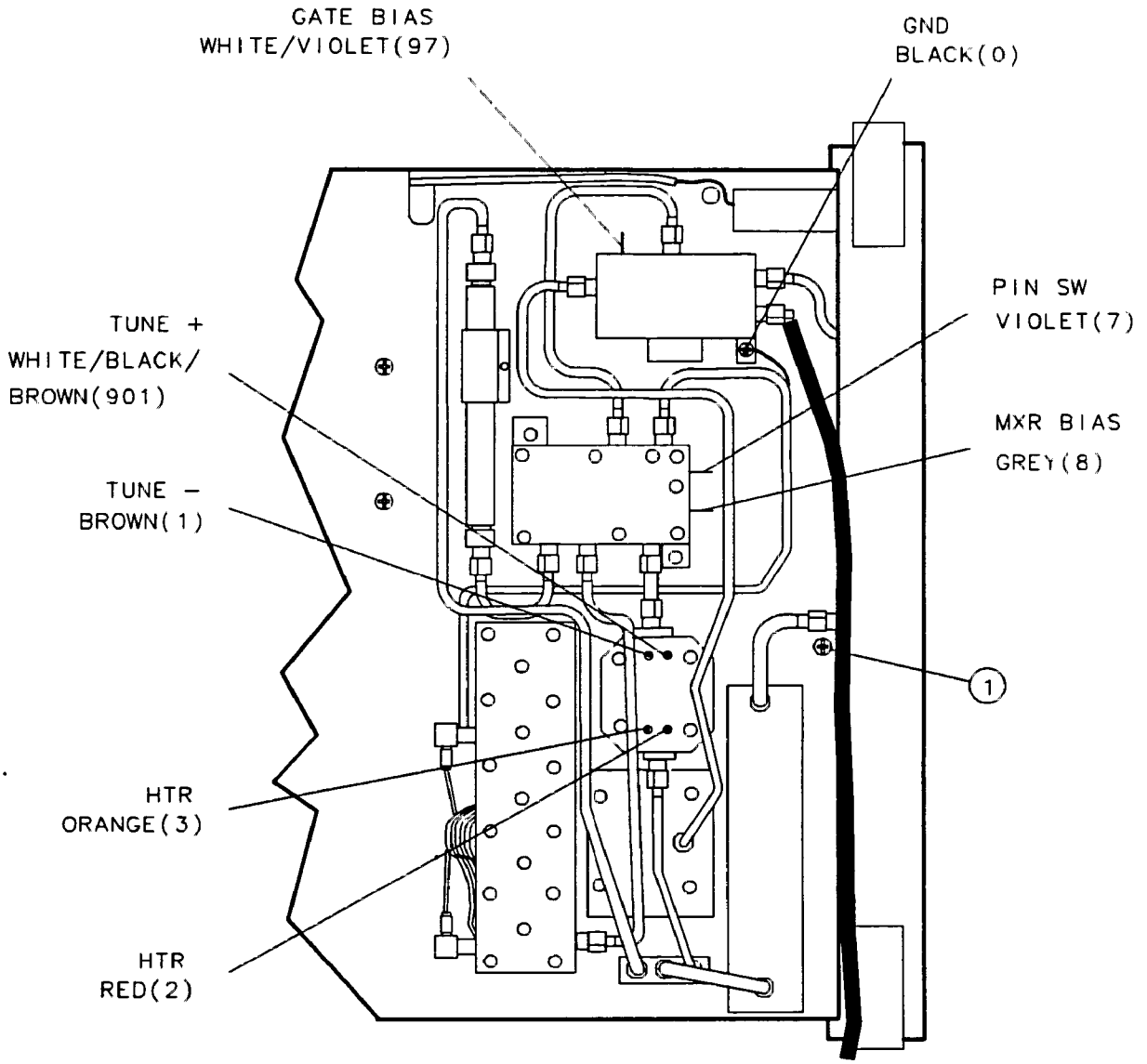

Figure 3-17. RF Section Bias Connections

A7 1st LO Distribution Amplifier

Removal

1. Use a 5/16 inch wrench to disconnect W38 and W39 at A7J1 and J2.
2. Disconnect W42 at the front panel 1ST LO OUTPUT connector. Loosen W42 at A7J3.
3. Remove the two screws securing the assembly to the analyzer's center deck.
4. Remove the gate bias wire, color code 97, and W12 from the A7 assembly.
5. Remove the assembly and disconnect W34.

Replacement

1. Use a 5/16 inch wrench to attach W34 to A7J4 and W42 to A7J3.
2. Connect gate bias wire, color code 97, to the A7 gate bias connection next to A7J2.
3. Connect cable W12 to the A7 Assembly.
4. Place gate bias wire, color code 97, beneath W38 and connect W38 to A7J1. Connect W42 to the front panel 1ST LO OUTPUT connector. Connect W39 to A7J2.
5. Use two panhead screws to secure A7 to the center deck. Be sure to attach the ground lug on the screw next to A7J4.
6. Tighten all RF cable connections.

A8 Dual Mixer

Removal

1. Disconnect W34 at A15A2J1, and place the analyzer upside-down on the work bench.
2. Remove wire, color code 7, from the A8 PIN SW connection and wire, color code 8, from the A8 MXR BIAS connection.
3. Remove W45 from FL1 and A8
4. Use a 5/16 inch wrench to loosen the semirigid coax cable connections at A8, J2, J3, J4, and J5.
5. Remove the two screws securing A8 to the center deck.
6. Remove all semirigid coax cables from the A8 Assembly.

Replacement

1. Place A8 on the center deck and attach all semirigid cables, starting with A8J3, using caution to avoid damaging any of the cables' center conductor pins.
2. Use two panhead screws to secure A8 to the center deck. Reconnect W45 to FL1 and A8.
3. Connect wire, color code 7, to the A8 PIN SW pin. Connect wire, color code 8, to the A8 MXR BIAS pin.
4. Tighten all semirigid coax connections on A8. Ensure that all other cable connections are tight.

A9 Input Attenuator

Note

Early versions of HP 8562A/B Spectrum Analyzers were shipped with the A9 Input Attenuator oriented with the ribbon-cable connector near the right side frame. Replacing the A9 Input Attenuator with the ribbon-cable connector near the INPUT 50Ω connector will result in improved VSWR performance. A new, longer attenuator-drive ribbon-cable assembly (HP part number 5062-0741) will be required if the attenuator orientation is changed.

Removal

1. Disconnect W34 at A15A2J1, and place the analyzer upside-down on the work bench.
2. Remove W41 and W43.
3. Remove screw (1) securing the attenuator to the front frame center support. See Figure 3-17.
4. Remove two screws (1) securing the A9 Input Attenuator to the right-side frame. See Figure 3-18. *Screws (2) are identified for another replacement procedure.*
5. Remove the attenuator and disconnect the attenuator ribbon cable.

Replacement

1. Connect the attenuator-control ribbon-cable to the A9 Input Attenuator.
2. Place the A9 Input Attenuator into the analyzer with the A9 mounting brackets resting against the front-frame center support and the right-side frame. Use caution to avoid damaging any cables.
3. Attach the attenuator to the center support with one panhead screw (1). See Figure 3-17.
4. Attach the attenuator to the right-side frame, using two flathead screws (1). See Figure 3-18.
5. Connect semirigid cables W41 and W43 to the attenuator assembly. Shrink tubing on W41 and W43 denotes A9 end.

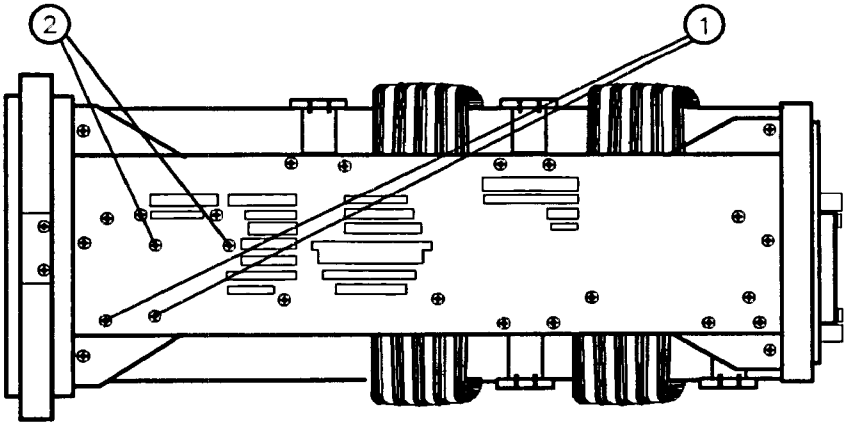

Figure 3-18. A9 Mounting Screws at Right Frame

A10 YTF (HP 8562A)

Removal

1. Use a 5/16 inch wrench to remove W46.
2. Remove FL2 and disconnect W38 at the A11 Assembly.
3. Disconnect the four bias wires connected to the A10 Assembly.
4. Remove four screws (1) securing A10 to the center deck. These screws are located on the top-side of the center deck as illustrated in Figure 3-19. *Screws (2) are identified for another replacement procedure.*
5. While holding on to the A10 Assembly, disconnect W47 and remove the assembly.

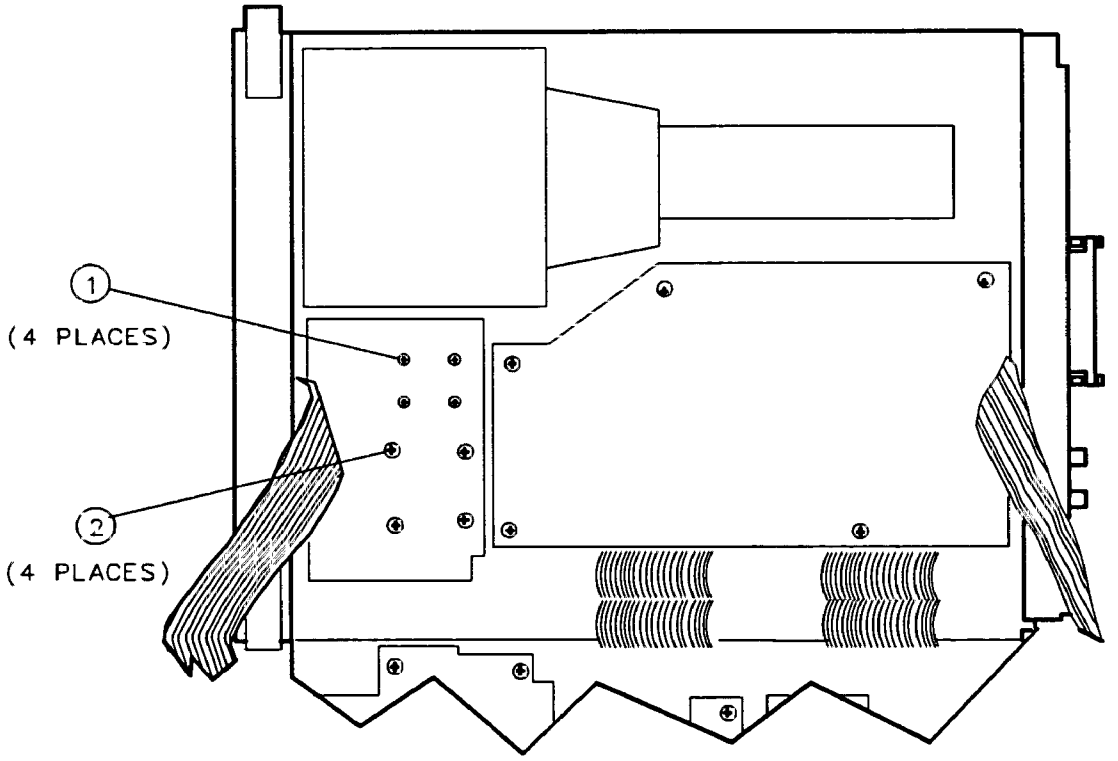

Figure 3-19. A10 Mounting Screws

Replacement

1. Orient the A10 YTF so that A10J2 connects to W47 and A10J1 connects to W46. Loosely attach A10 to W47.
2. Tighten the RF connections on W47.
3. Secure A10 to the analyzer's center deck, using the four screws removed in "Removal" step 4.
4. Connect the four A10 bias wires as illustrated in Figure 3-17.
5. Connect W38 to A11 and install FL2 and W46. Ensure that FL2 does not contact the terminals on the A10 Assembly.

A11 YTO

Removal

1. Use a 5/16 inch wrench to remove W46.
2. Remove FL2 and disconnect W38 at the A11 Assembly.
3. Disconnect W44 at A12 RF Switch.
4. Tilt the analyzer on its right-side frame allowing access to the four A11 mounting screws (2) illustrated in Figure 3-19. Remove the screws while holding onto A11.
5. Disconnect W10 from A11.

Replacement

1. Reconnect W10 to A11.
2. Orient the A11 Assembly in the analyzer as illustrated in Figure 3-16 .
3. Tilt the analyzer on its right-side frame and secure the A11 Assembly to the center deck, using the four screws removed in "Removal" step 4.
4. Connect W44 at RF switch A12. Make sure the connector at the opposite end of W44 remains tight.
5. Connect W38 to A11. Install W46 to the A12 terminal labeled "2" and to A11.
6. Install FL2, ensuring that it does not touch any terminals on the A10 Assembly (HP 8562A).

A12 RF Switch

Removal

1. Disconnect W34 at A15A2J1, and place the analyzer upside-down on the work bench.
2. Use a 5/16 inch wrench to remove W46 and W43. Disconnect W44 at the A12 Assembly.
3. Remove two screws (2) securing the A12 RF switch bracket to the right-side frame. See Figure 3-18.
4. Remove A12, using caution to avoid damaging the attenuator ribbon cable.
5. Unsolder the three control wires located on the underside of A12. Remove the switch bracket from the assembly.

Replacement

1. Attach the mounting bracket to the A12 RF switch as illustrated in Figure 3-20.

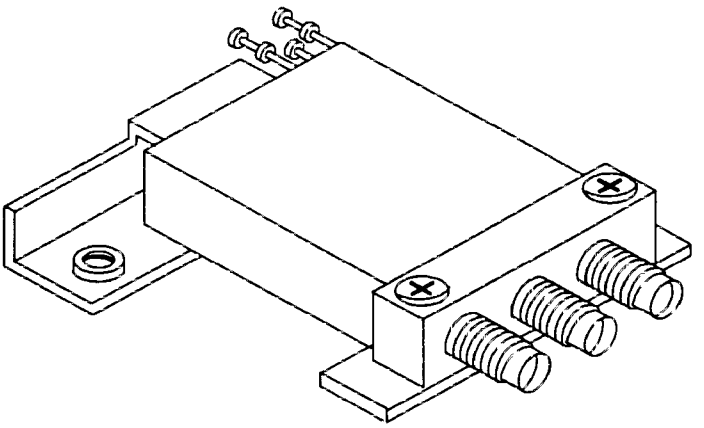

Figure 3-20. A12 Mounting Bracket

2. Solder the following control wires to the A12 Assembly:

   Blue wire to A12 "−1" terminal
   Yellow wire to A12 "+2" terminal

3. Mount the A12 Assembly to the analyzer's right-side frame, using two flathead screws (2). See Figure 3-18. Use caution to avoid damaging any cables.
4. Connect W44 to A12 connector 1. Install W43 from the A9 Input Attenuator to the A12 in connector. Shrink tubing on W43 denotes A9 end.
5. Install W46 to A12 connector 2.

A13 Second Converter

Caution Turn off the analyzer's power when replacing the A13 Second Converter Assembly. Failure to turn off the power may result in damage to the assembly.

Removal

1. Disconnect W34 at A15A2J1, and place the analyzer upside-down on the work bench.
2. Disconnect ribbon cable W13 from the A13 Assembly.
3. Disconnect W33, coax 81, and W35, coax 92, from the A13 Assembly.
4. Disconnect FL3 from A13J3. Disconnect FL2 from A13J1.
5. Remove the four screws securing A13 to the main deck and, remove the assembly.

Replacement

1. Secure A13 to the analyzer's main deck, using four panhead screws.
2. Connect FL3 to A13J3 and FL2 to A13J1. Ensure that the connections on both ends of FL2 and FL3 are tight.
3. Connect W35, coax 92, to A13J2, the 310.7 MHz OUT jack. Route the cable between FL3 and the main deck.
4. Connect W33, coax 81, to A13J4, the 600 MHz IN jack. Route the cable over A13J3.
5. Connect ribbon cable W13 to the A13 Assembly.

Procedure 9. A14 and A15 Assemblies

Removal

1. Remove the analyzer's cover as described in Procedure 1, "Analyzer Cover."
2. Place the analyzer on its right-side frame.
3. Remove the eight screws and washers holding the A14 and A15 assemblies to the bottom of the analyzer. These screws are labeled 1 and 2 in Figure 3-21.

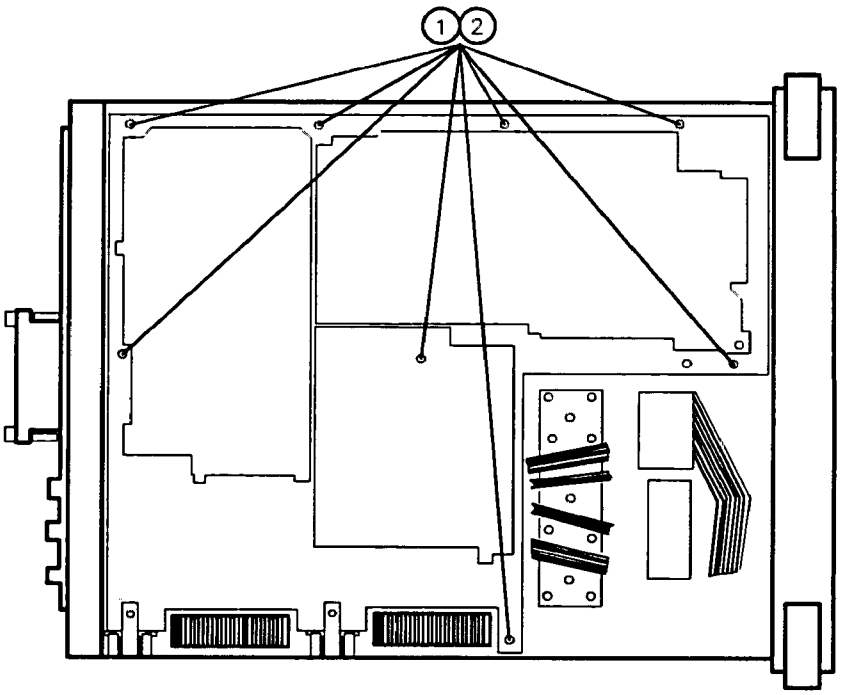

Figure 3-21. A14 and A15 Assembly Removal

Caution Washers are not captive. Loose washers in instrument may cause internal damage.

Caution Do not fold the board assemblies out of the analyzer one at a time. Always fold the A14 and A15 assemblies as a unit. Folding out one assembly at a time binds the hinges attaching the assemblies and may damage an assembly and hinge.

4. The board assemblies are attached to the analyzer's right-side frame with two hinges. Fold both the A14 and A15 assemblies out of the analyzer as a unit.
5. Remove all cables from the assembly being removed.
6. Remove the two screws that attach the assembly being removed to its two mounting hinges.

Caution Do not torque shield screws to more than 5 inch-pounds. Applying excessive torque will cause the screws to stretch.

Replacement

1. Attach the removed assembly to the two chassis hinges with two panhead screws.
2. Attach all cables to the assembly as illustrated in Figure 3-22.
3. Lay the A14 and A15 assemblies flat against each other in the folded out position. Make sure that no cables become pinched between the two assemblies. Ensure that all coaxial cables are clear of hinges and standoffs before continuing with the next step.
4. Fold both board assemblies into the analyzer as a unit. Use caution to avoid damaging any cable assemblies.
5. Secure the assemblies using the eight screws and washers removed in "Removal" step 3. Place a washer (2) on the appropriate screws. See Figure 3-21.
6. Secure the analyzer's cover assembly as described in Procedure 1, "Analyzer Cover."

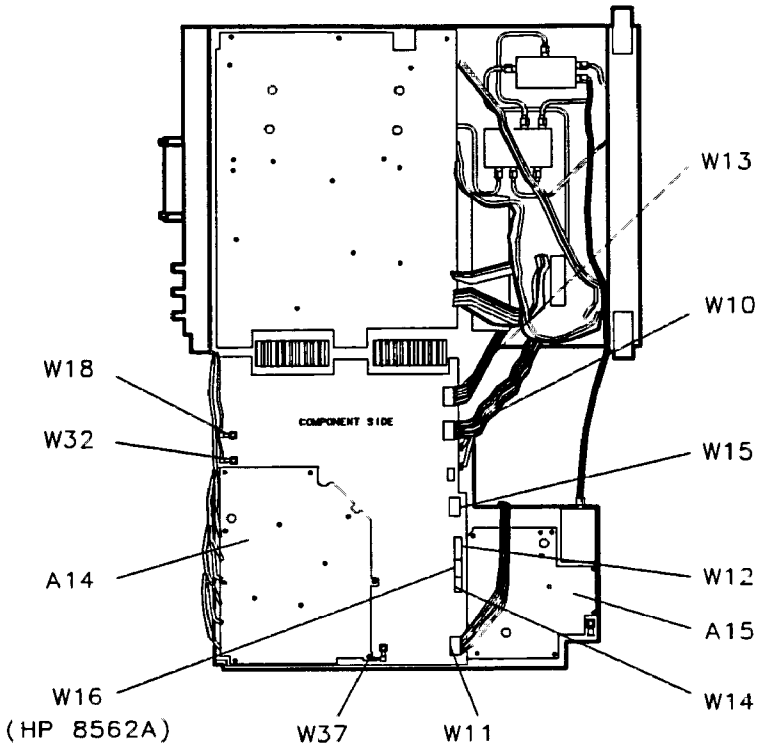

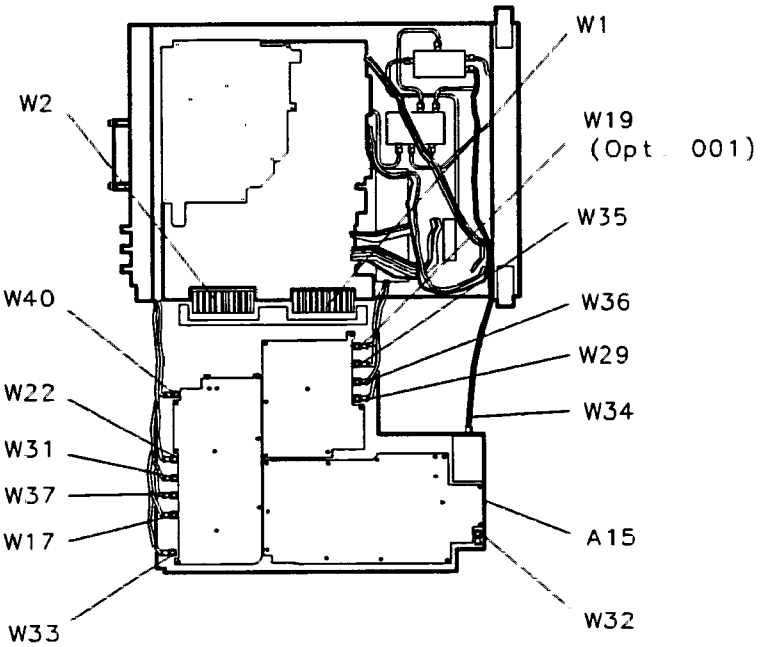

Figure 3-22. A14 and A15 Assembly Cables

Procedure 10. A16 CAL Oscillator/A17 CRT Driver

Removal

1. Remove the analyzer's cover assembly and fold out the A2, A3, A4, and A5 assemblies as described in Procedure 5, "A2, A3, A4, and A5 Assemblies Removal," steps 3 through 6.
2. Place the analyzer top-side-up on the work bench.
3. Remove two screws (1) securing the two board-mounting posts to the left-side frame, and remove the posts. See Figure 3-23.
4. Remove two screws (2) securing the A16 and A17 assemblies to the left-side frame.
5. Pull the A16 Assembly out of the analyzer.
6. Pull the A17 Assembly out of the analyzer.

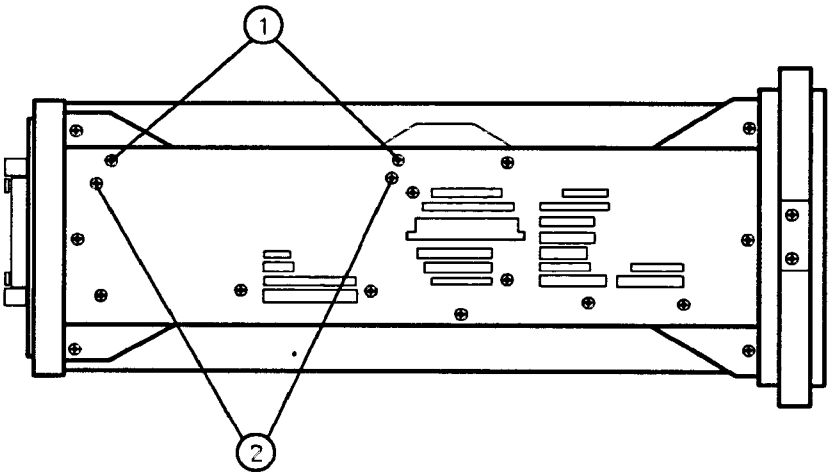

Figure 3-23. A16 and A17 Mounting Screws

Replacement

1. Connect W7, W8, W9, A6A1W2, and A18W1 to the A17 CRT Driver Assembly. Place the assembly into the center-deck mounting slot next to the CRT assembly.
2. Connect all A16 Assembly cables as illustrated in Figure 3-24 which shows the left-side frame removed so that proper A16 Assembly cable routing may be viewed. Place the assembly into the center-deck mounting slot nearest the left-side frame.
3. Secure the A16 and A17 assemblies to the left-side frame using two flathead screws. Attach the two board mounts to the left-side frame using two flathead screws. See Figure 3-23.
4. Place the analyzer on its right-side frame.
5. Fold the A2, A3, A4, and A5 assemblies into the analyzer as described in Procedure 5, "A2, A3, A4, and A5 Assemblies." Secure the analyzer's cover assembly.

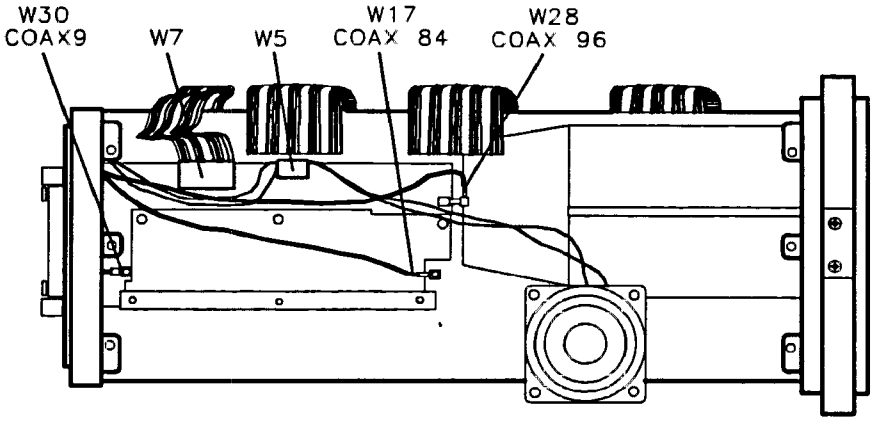

Figure 3-24. A16 Cable Routing

Procedure 11. B1 Fan

Removal/Replacement

Warning **Always disconnect the power cord from the instrument before beginning this replacement procedure. Failure to follow this precaution can represent a shock hazard which may result in personal injury.**

1. Remove the four screws securing the fan assembly to the rear frame.
2. Remove the fan, and disconnect the fan wire from the A6 Power Supply Assembly.
3. To reinstall the fan, connect the fan wire to A6J3 and place the wire into the channel provided on the left side of the rear frame opening. Secure the fan to the rear frame using four panhead screws.

Note The fan must be installed so that the air flows through the instrument from the rear panel to the front panel.

Procedure 12. BT1 Battery

Warning

Battery BT1 contains lithium iodide. Do not incinerate or puncture this battery. Dispose of discharged battery in a safe manner.

Caution

To avoid loss of the calibration constants stored on the A2 Controller Assembly, connect the analyzer to the main power source before removing the battery.

Removal/Replacement

1. Locate the battery assembly cover on the analyzer's rear panel. Use a screwdriver to remove the two flathead screws securing the cover to the analyzer.
2. Remove the old battery and replace it with the new one, ensuring proper polarity.
3. Measure the voltage across the new battery. Nominal new battery voltage is approximately +3.6 V. If this is not the case, check the battery cable and A2 Controller Assembly.
4. Secure the battery assembly into the analyzer.

Procedure 13. Rear Frame/Rear Dress Panel

Removal

Warning **The A6 Power Supply and A6A1 High Voltage assemblies contain lethal voltages with lethal currents in all areas. Use extreme care when servicing these assemblies. Always disconnect the power cord from the instrument before beginning this replacement procedure. Failure to follow this precaution can represent a shock hazard which may result in personal injury.**

1. Disconnect the line-power cord from the analyzer.
2. Remove the analyzer's cover, and place the analyzer on its right-side frame.
3. Fold out the A2, A3, A4, and A5 assemblies as described in Procedure 5, "A2, A3, A4, and A5 Assemblies Removal," steps 3 through 5.
4. Disconnect the HP-IB cable at A2J5.
5. Place the analyzer top-side-up on the work bench.

Warning **The voltage potential at A6A1W3 is +9 kV. Disconnect at the CRT with caution! Failure to discharge A6A1W3 may result in *severe electrical shock* to personnel and damage to the instrument.**

6. Using a small screwdriver with the shank in contact with the CRT shield assembly, slip the tip of the screwdriver under the A6A1W3 post-accelerator cable's rubber shroud and short the cable to ground on the CRT shield assembly. See Figure 3-2.
7. Remove the three screws securing the power-supply shield to the power supply, and remove the shield. On some instruments one screw uses a flat washer.
8. Disconnect the fan and line-power cables from A6J3 and A6J101 on the A6 Power Supply Assembly.
9. Remove the two flathead screws securing the rear-panel battery assembly, and remove the assembly. Unsolder the two wires attached to the battery assembly.
10. Use a 9/16 inch nut driver to remove the dress nuts holding the BNC connectors to the rear frame. If necessary, drill out the nut driver to fit over the BNC connectors, and cover it with heatshrink tubing or tape to avoid scratching the dress panel.
11. *For option 001 analyzers:* Use a 5/16 inch wrench to disconnect W19, coax 83, from rear panel connector J10.
12. Disconnect the two cable ties holding ribbon cable W7 to the A19 HP-IB Assembly.
13. Remove four screws (1) securing the rear frame to the main deck. See Figure 3-25.
14. Remove the six screws securing the rear frame to the left- and right-side frames.
15. Use a 3/8 inch nut driver to remove the nut securing the earphone jack. Carefully remove the jack using caution to avoid losing the lock washer located on the inside of the rear-frame assembly. Replace the washer and nut onto the jack for safekeeping.
16. Remove the rear frame assembly.

17. To remove the rear-dress panel, remove the two spring clips located on the inside of the rear frame near the display adjustment holes.

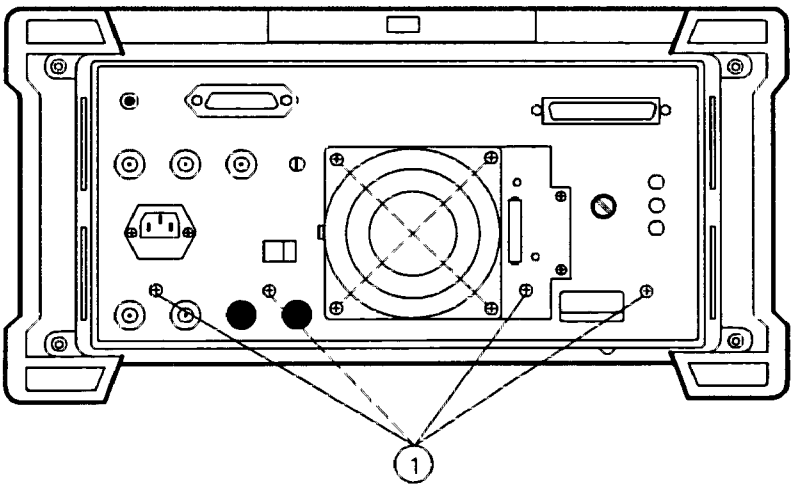

Figure 3-25. Main Deck Screws

Replacement

1. If the rear-dress panel is removed, secure it to the rear frame using two spring clips. Take care to seat the panel tight against the frame.
2. Place the analyzer on its front panel allowing easy access to the rear frame area.
3. Place the rear frame on the analyzer and use a 3/8 inch nut driver to secure the earphone jack. A lock washer should be used on the inside of the rear frame and a flat washer on the outside.
4. Place the coax cable's BNC connectors into the appropriate rear-frame holes as described below. Use a 9/16 inch nut driver to attach the dress nuts holding the BNC connectors to the rear frame.

Rear Panel Jack	RF Cable
J4	W24, coax 5
J5	W23, coax 93
J6	W25, coax 4
J8	W18, coax 97
J9	W31, coax 8

5. *For Option 001 analyzers:* Use a 5/16 inch wrench to connect W19, coax 83, to rear panel connector J10.
6. Secure the rear frame to the analyzer's main deck, using four panhead screws (1). See Figure 3-25.
7. Secure the rear frame to the analyzer side frames using three flathead screws per side. Use caution to avoid damaging any coaxial cables.
8. Place the analyzer top-side-up on the work bench.

9. Pull the red and black battery wires through the rear-frame's battery-assembly hole. Solder the red wire to the battery-assembly's positive lug and the black wire to the negative lug.
10. Secure the battery assembly to the rear frame, using two flathead screws.
11. Reconnect the two cable ties on the A19 HP-IB Assembly to hold ribbon cable W7 to the A19 Assembly.
12. Connect the fan and line-power cables to A6J3 and A6J101 on the A6 Power Supply.
13. Snap the A6A1W3 post-accelerator cable to the CRT assembly.
14. Snap the black grommet protecting A6A1W3 into the CRT shield.
15. Ensure that all cables are safely routed and will not be damaged when securing the A6 cover.
16. Secure the power-supply cover shield to the power supply, using three flathead screws (1). On some instruments a flat washer is used with one of the screws. If one of the screws removed had a flat washer with it, then replace it as shown in Figure 3-26. One end of the cover fits into a slot provided in the rear frame assembly.
17. Connect the HP-IB cable to A2J5.
18. Fold the A2, A3, A4, and A5 assemblies into the analyzer as described in Procedure 5, "A2, A3, A4, and A5 Assemblies Replacement", steps 9 through 11.

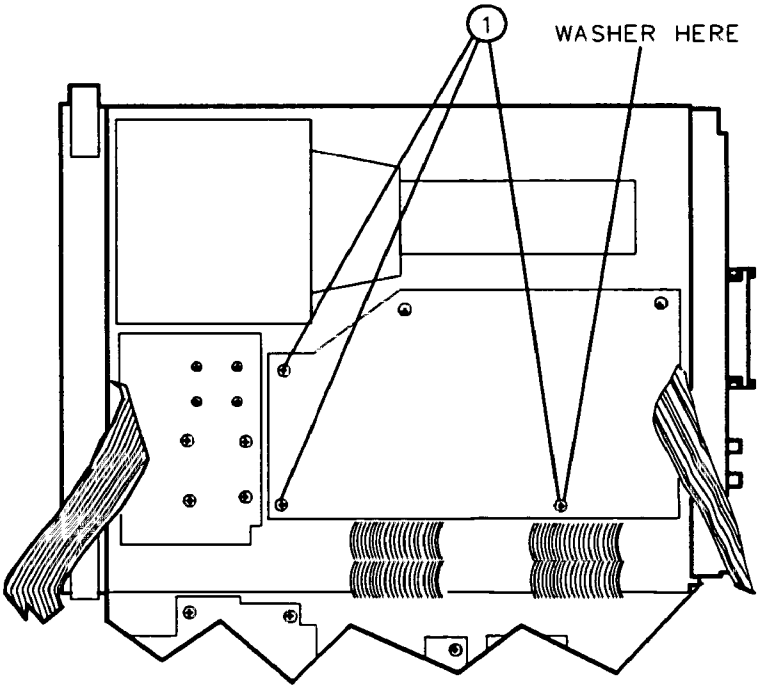

Figure 3-26. A6 Power-Supply Cover

Procedure 14. W3 Line Switch Cable

Removal

Warning **Due to possible contact with high voltages, disconnect the analyzer's line-power cord before performing this procedure.**

1. Remove the analyzer's cover assembly as described in Procedure 1, "Analyzer Cover."
2. Fold out the A2, A3, A4, and A5 assemblies as described in Procedure 5, "A2, A3, A4, and A5 Assemblies Removal," steps 3 through 5.
3. Disconnect A1A1W1 from A3J602.
4. Place the analyzer top-side on the work bench.

Warning **The voltage potential at A6A1W3 is +9 kV. Disconnect the analyzer's line-power cord before performing this procedure. Failure to discharge A6A1W3 correctly may result in *severe electrical shock* to personnel and damage to the instrument.**

5. Using a small screwdriver with the shank in contact with the CRT shield assembly, slip the tip of the screwdriver under the A6A1W3 post-accelerator cable's and rubber shroud and short the cable to ground on the CRT shield assembly. See Figure 3-2.
6. Remove the three screws securing the power supply shield to the power supply, and remove the shield.
7. Pull the cable tie (1), Figure 3-27, to free W9 and the post-accelerator cables.
8. Disconnect W3 from A6J2.
9. Pull W3 up from between the power supply and the CRT assembly.
10. Undress W3 from underneath A18W1, A6A1, and W9 assemblies.
11. Place the analyzer on its right-side frame.
12. Fold out the A14 and A15 assemblies as described in Procedure 9, "A14 and A15 Assemblies Removal," steps 3 and 4.
13. Remove the screw (1) securing W3, the line switch assembly, to the front frame. The screw is captive. See Figure 3-28.

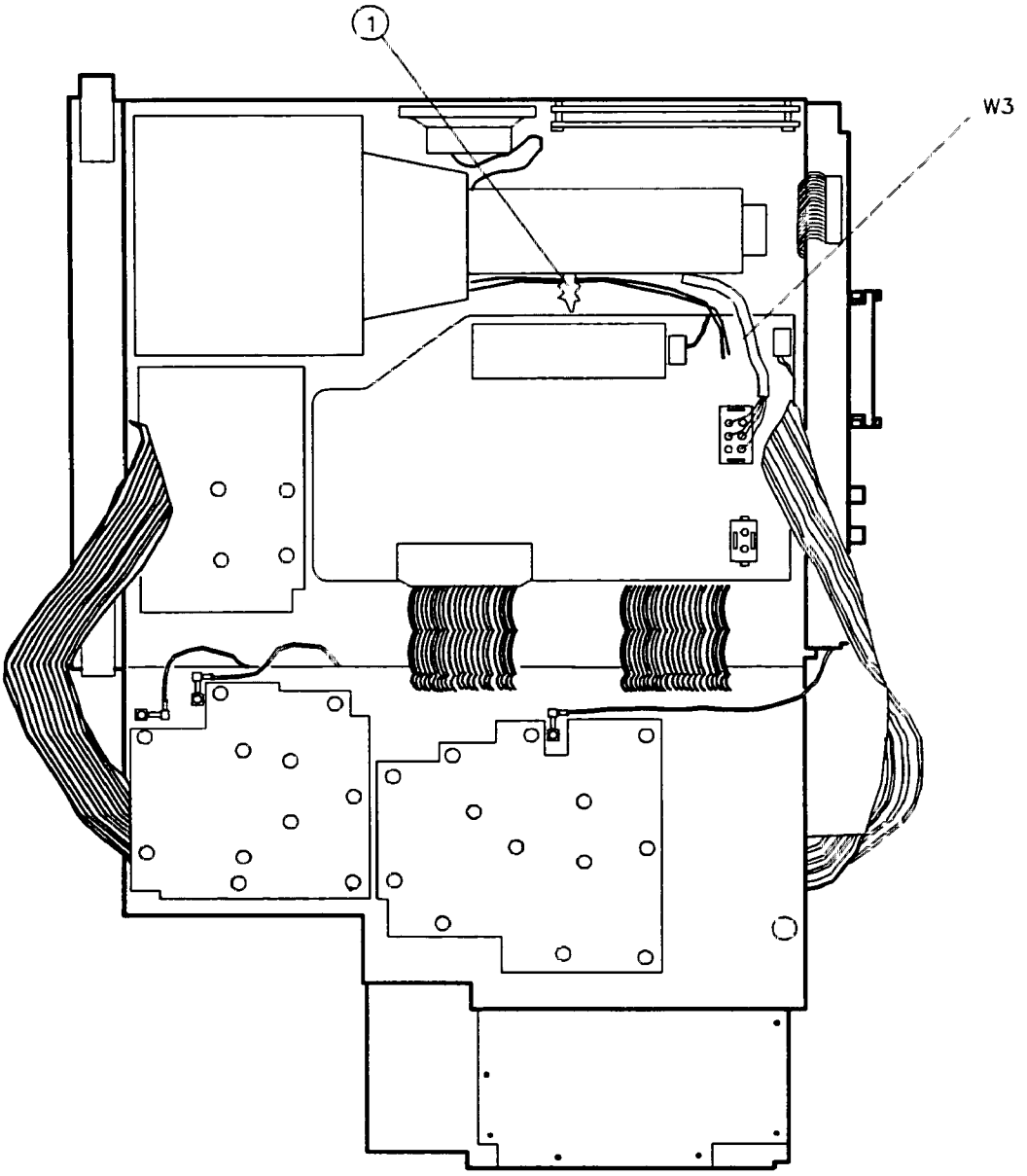

Figure 3-27. W3 Dress and Connection to A6 Power Supply

14. Remove A1W1 and A1W1DS1 from the line switch assembly. Let each hang freely.

Note

If contact removal tool, HP part number 8710-1791, is available, complete assembly removal by performing "Removal" steps 15 and 16. If not, skip to "Removal" step 17.

---

15. From the top side of the analyzer, use contact removal tool, HP part number 8710-1791, to remove the four wires from the W3 connector. See Figure 3-29. With wire cutters, clip the tie wrap holding the cable to the contact housing.
16. Completely remove the cable from the instrument.

17. Remove the A1 Front Frame Assembly and A18 CRT Assembly as described in Procedure 2, "A1 Front Frame/A18 CRT Removal," steps 10 through 23.
18. Remove the left side frame from the analyzer using the hardware listed below. (The side frame will still be attached by the speaker wires. Do not let it hang freely.)

Screw	Quantity
(1) SCREW-MACH M4 X 0.7 8 MM-LG FLAT HD	3
(2) SCREW-MACH M3 X 0.5 35 MM-LG FLAT HD	2
(3) SCREW-MACH M3 X 0.5 6 MM-LG FLAT HD	6

19. Remove the line switch cable assembly.

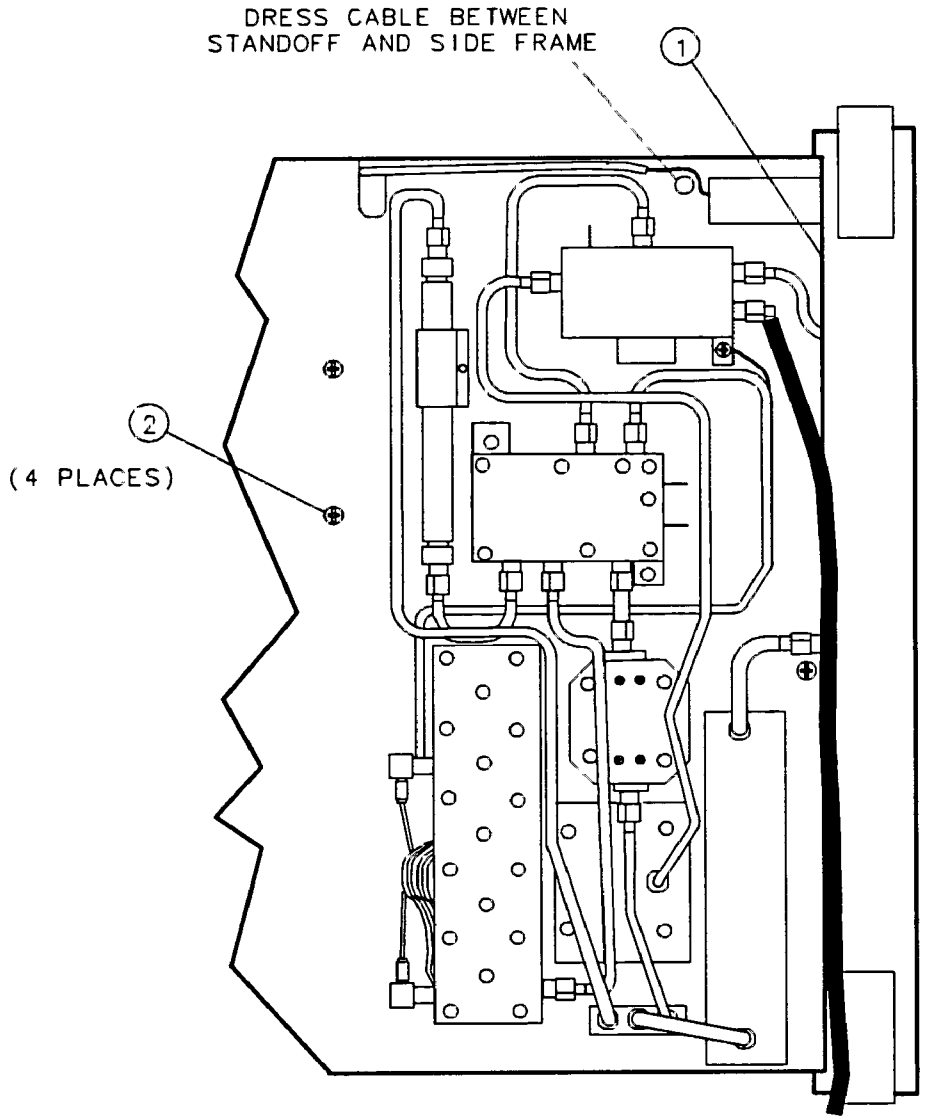

Figure 3-28. Line Switch Mounting Screw and Cable Dress

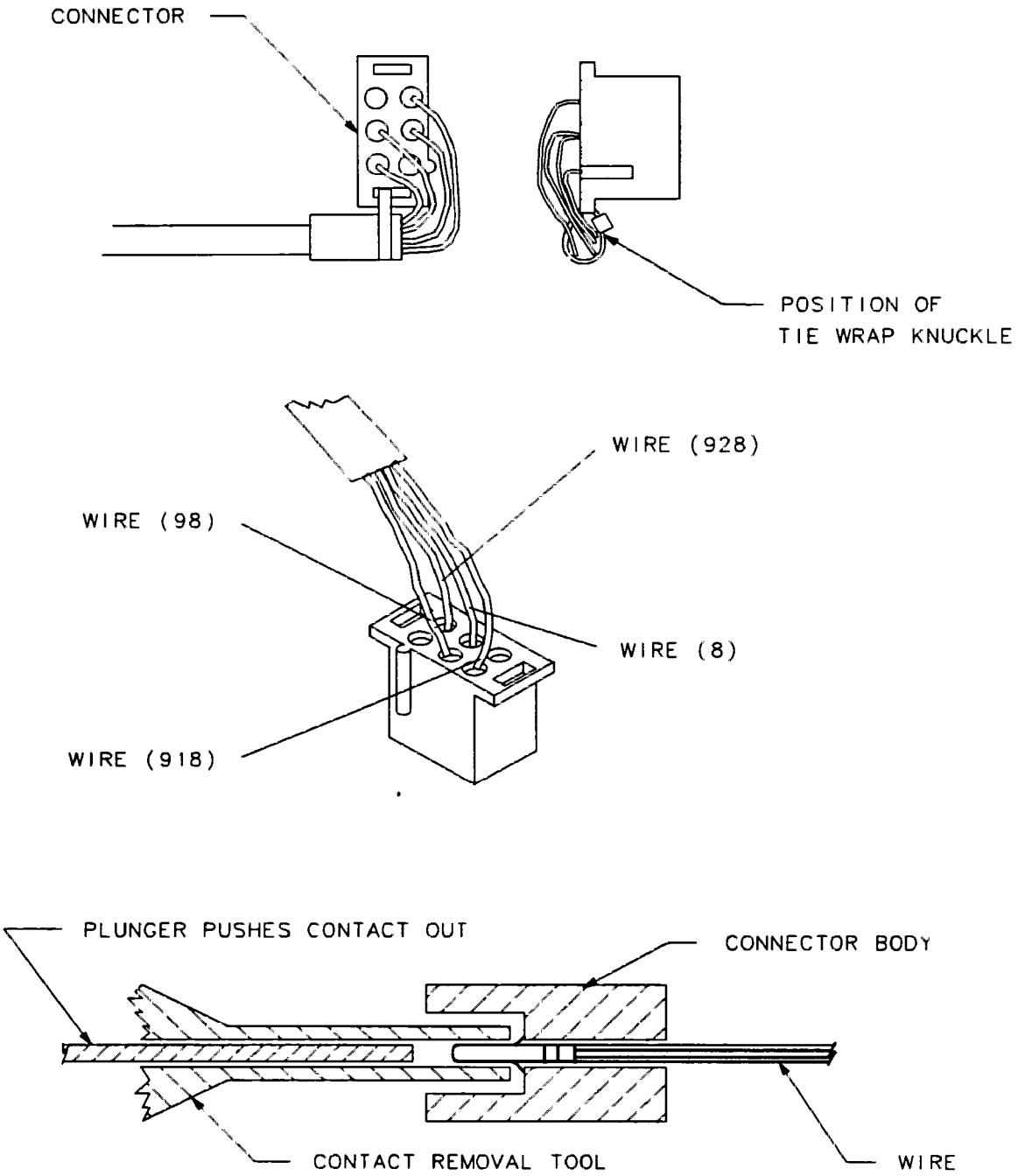

Figure 3-29. W3 Cable Connector

Replacement (Using Contact Removal Tool, HP part number 8710-1791)

1. Ensure that the action of the switch is working properly. With a pair of wire cutters, clip the tie wrap holding the cable to the contact housing of the replacement W3 Assembly.
2. Using the contact removal tool, remove the four wires from the replacement cable assembly's connector.
3. From the bottom side of the analyzer, insert the contact end of W3 through the slotted opening in the main deck. W3 should come through to the top side of the analyzer between the A18 CRT Assembly and the post-accelerator cable.
4. Place LED A1W1DS1 into the line switch assembly.
5. Attach the line switch assembly into the front frame, using the captive panhead screw. Be sure to connect the line switch grounding lug with the screw.
6. Dress W3 between the main deck standoff and the side frame. See Figure 3-27.
7. On the top side of the analyzer, redress W3 underneath A18W1, A6A1, and W9 assemblies.
8. Insert the four contacts into the W3 connector as shown in Figure 3-29.
9. Attach the cable to the connector housing using the supplied tie wrap.
10. Connect W3 to A6J2. Dress W3 into the slotted opening in the deck.
11. Secure the power-supply cover shield to the power supply, using three flathead screws. On some instruments a flat washer is used with one of the screws. If one of the screws removed had a flat washer with it, then replace it as shown in Figure 3-26. One end of the cover fits into a slot provided in the rear-frame assembly.
12. Redress W3, A18W1, A6A1, and W9 down between the CRT assembly and the power supply cover such that the W9 wires are below the surface of the power-supply cover.
13. Fold up the A2, A3, A4, and A5 assemblies into the analyzer as described in Procedure 5, "A2, A3, A4, and A5 Assemblies Replacement," steps 5 through 10.
14. Fold up A14 and A15 assemblies as described in Procedure 9, "A14 and A15 Assemblies Replacement," steps 9 through 11.

Replacement (Without Contact Removal Tool)

1. Lay the replacement line-switch cable assembly between the side frame and main deck. Ensure that the action of the switch is working properly.
2. Attach the left side frame to the deck and rear frame. See Figure 3-30.

Screw	Quantity
(1) SCREW-MACH M4 X 0.7 8 MM-LG FLAT HD	3
(2) SCREW-MACH M3 X 0.5 35 MM-LG FLAT HD	2
(3) SCREW-MACH M3 X 0.5 6 MM-LG FLAT HD	6

3. Dress W3 between the main deck standoff and the side frame. See Figure 3-27.
4. Attach the A1 Front Frame Assembly and the A18 CRT Assembly as described in Procedure 2, "A1 Front Frame/A18 CRT Replacement," steps 1 through 15.
5. Place LED A1W1DS1 into the line-switch assembly.

6. Attach the line-switch assembly into the front frame using the captive panhead screw. Be sure to connect the line-switch grounding lug with the screw.

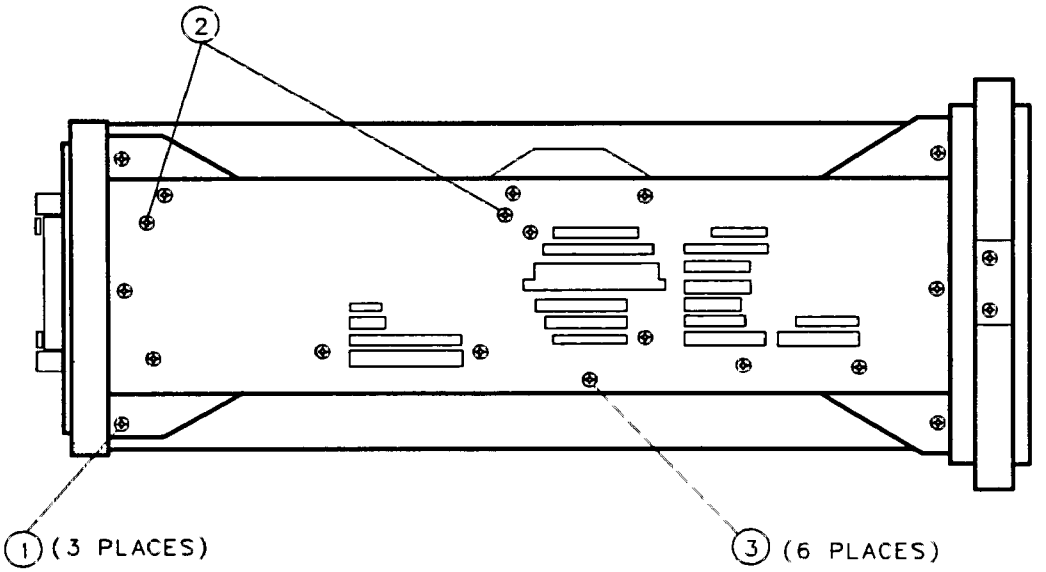

Figure 3-30. Side Frame Mounting Screws

7. On the top side of the analyzer, place W3 underneath A18W1, A6A1, and W9 assemblies.
8. Connect W3 to A6J2. Dress W3 into the slotted opening in the deck.
9. Secure the power-supply cover shield to the power supply using three flathead screws. On some instruments a flat washer is used with one of the screws. If one of the screws removed had a flat washer with it, then replace it as shown in Figure 3-26. One end of the cover fits into a slot provided in the rear frame assembly.
10. Place W3, A18W1, A6A1, and W9 between the CRT assembly and the power supply cover so the W9 wires are below the surface of the power-supply cover.
11. Fold up the A2, A3, A4, and A5 assemblies into the analyzer as described in Procedure 5, "A2, A3, A4, and A5 Assemblies Replacement," steps 5 through 10.
12. Fold up A14 and A15 assemblies as described in Procedure 9, "A14 and A15 Assemblies Replacement," steps 3 through 5.
13. Replace the analyzer's cover assembly.
14. Connect the line-power cord and switch the analyzer's power on. If the analyzer does not operate properly, turn off the analyzer power, disconnect the line cord, and recheck the analyzer.

Procedure 15. EEROM (A2U501)

Refer to Table 4-1 in Chapter 4 for the part number of A2U501.

Removal/Replacement

Caution The EEROM is replaced with the power on. Use a nonmetallic tool to remove the defective EEROM and install the new EEROM.

1. Turn the HP 8562A/B's (LINE) switch off. Remove the analyzer's cover assembly and fold out the A2, A3, A4, and A5 assemblies as described in Procedure 5, "A2, A3, A4, and A5 Assemblies Removal," steps 3 through 5.
2. Turn the HP 8562A/B's (LINE) switch on.
3. Set the WR PROT/WR ENA jumper on the A2 Controller Assembly to the WR ENA position.
4. Press (INT) and COPY EEROM. The analyzer will store the contents of the EEROM into the program RAM.
5. Using a nonmetallic tool, carefully remove the defective EEROM.
6. Carefully install a new EEROM.
7. Press COPY EEROM and YES. The analyzer will store the contents of the program RAM into the new EEROM.
8. Turn the HP 8562A/B's (LINE) switch off, then on, cycling the analyzer power. Allow the power-on sequence to finish.
9. If error message 701, 702, 703, or 704 is displayed, press (RECALL), MORE, and RECALL ERRORS. Use the STEP keys to view any other errors.
10. If error message 701 or 703 is displayed, perform the Frequency Response adjustment. If the analyzer is an HP 8562A, perform the YTF adjustment before performing the Frequency Response adjustment. (If a TAM is available, perform the module's "Low Band Flatness," "High Band Flatness," and "YTF" tests. Press (MODULE), ADJUST to enter the adjust menu of the TAM.)
11. If error message 704 is displayed, press (SAVE), SAVE PRSEL PK, and (PRESET).
12. If there are no errors after cycling the analyzer power, the EEROM is working properly, but the frequency-response correction and preselector-peak data might be invalid. Check the analyzer's frequency response.
13. Place the WR PROT/WR ENA jumper in the WR PROT position.
14. Fold the A2 and A3 assemblies into the analyzer as described in Procedure 5, "A2, A3, A4, and A5 Assemblies." Secure the analyzer's cover assembly.

Procedure 16. A21 OCXO (Option 003)

Removal

1. Remove the rear-frame assembly as described in Procedure 13, "Rear Frame/Rear Dress Panel Removal," steps 1 through 16.
2. Place the analyzer on its right-side frame.
3. Fold out the A14 and A15 assemblies as described in Procedure 9, "A14 and A15 Assemblies Removal," steps 3 and 4.
4. Remove the three screws (1) securing the OCXO to the main deck. See Figure 3-31.
5. Disconnect W49, coax 82, and W50 from the OCXO and remove the OCXO from the analyzer.

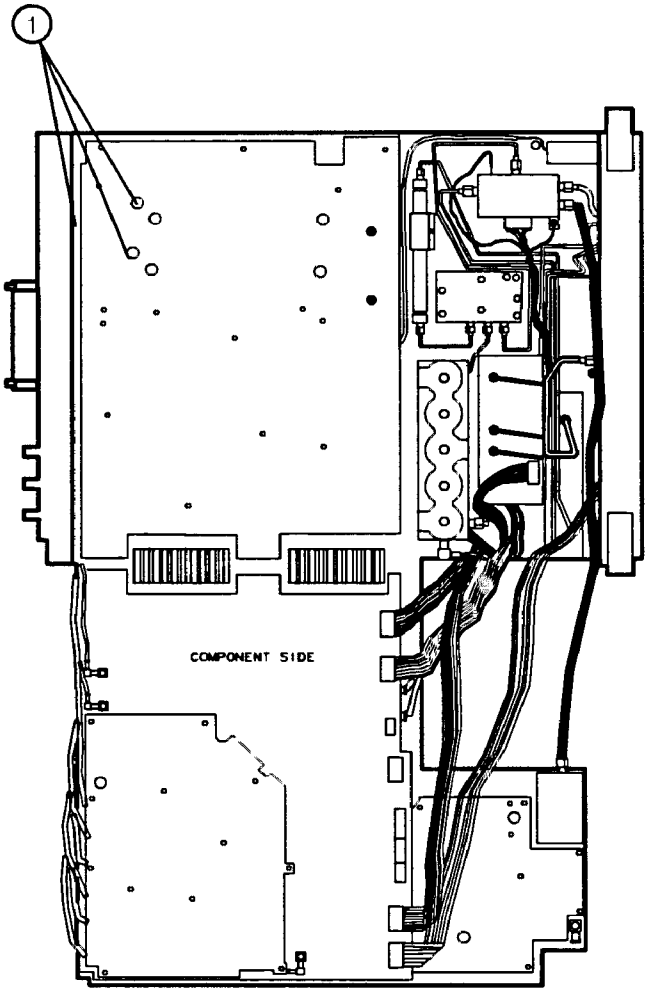

Figure 3-31. A21 OCXO Mounting Screws

Replacement

1. Connect W49, coax 82, and W50 to the OCXO and position the OCXO in the analyzer.
2. Secure trhe OCXO to the analyzer's main deck using three screws (1). See Figure 3-31.
3. Fold the A14 and A15 assemblies into the anlayzer as described in Procedure 9.
4. Perform the rear-frame assembly replacement procedure described in Procedure 13.

4

Replaceable Parts

This chapter contains information on ordering all assembly-level replaceable parts and assemblies. Locate the instrument parts in the following tables and figures:

Table	Page
4-1. Firmware-Dependent Part Numbers	4-3
4-4. Replaceable Parts	4-9

Figure	Page
4-1. Parts Identification, Assembly Mounting Screws	4-18
4-2. Parts Identification, Cover Assembly	4-21
4-3. Parts Identification, Main Chassis	4-25
4-4. Parts Identification, Front Deck	4-29
4-5. Parts Identification, Front Frame	4-33
4-6. Parts Identification, Rear Frame	4-37

Ordering Information

To order a part or assembly, quote the Hewlett-Packard part number (with check digit), indicate the quantity required, and address the order to the nearest Hewlett-Packard office. The check digit will ensure accurate and timely processing of your order.

To order a part that is not listed in the replaceable parts table, include the instrument model number, the description and function of the part, and the number of parts required. Address the order to the nearest Hewlett-Packard office.

Direct Phone-Order System

Within the USA, a phone order system is available for regular and hotline replacement parts service. A toll-free phone number is available, and Mastercard and Visa are accepted.

Regular Orders: The toll-free phone number, (800) 227-8164, is available 6 AM to 5 PM, Pacific time, Monday through Friday. Regular orders have a four-day delivery time.

Hotline Orders: Hotline service for ordering emergency parts is available 24 hours a day, 365 days a year. There is an additional hotline charge to cover the cost of freight and special handling.

The toll-free phone number, (800) 227-8164, is available 6 AM to 5 PM, Pacific time, Monday through Friday; call (415) 968-2347 after-hours, weekends, and holidays. Hotline orders are normally delivered the following business day.

Parts List Format

The following information is listed for each part:

1. The Hewlett-Packard part number.
2. The part number check digit (CD).
3. The total quantity (Qty) in the assembly. This quantity is given only once, at the first appearance of the part in the list.
4. The description of the part.
5. A five-digit code indicating a typical manufacturer of the part.
6. The manufacturer part number.

Firmware-Dependent Part Numbers

Table 4-1 lists the part numbers for UVEPROMs A2U306 through A2U311. These part numbers are dependent on the firmware date code used in the analyzer. To determine the firmware date code, press (PRESET) and look in the display's active-function area for firmware revision information.

Table 4-1. Firmware-Dependent Part Numbers

Firmware Date Code	A2U306	A2U307	A2U308	A2U309	A2U310	A2U311
861218	08562-80001	08562-80002	08562-80003	08562-80004	08562-80020	08562-80021
870312	08562-80048	08562-80049	08562-80050	08562-80051	08562-80056	08562-80057
870728	08562-80077	08562-80078	08562-80079	08562-80080	08562-80081	08562-80082
870824	08562-80090	08562-80091	08562-80092	08562-80093	08562-80094	08562-80095
871115	08562-80106	08562-80107	08562-80108	08562-80109	08562-80110	08562-80111
880201	08562-80120	08562-80121	08562-80122	08562-80123	08562-80124	08562-80125
881031	08562-80136	08562-80137	08562-80138	08562-80139	08562-80140	08562-80141
891012	08562-80157	08562-80158	08562-80159	08562-80160	08562-80161	08562-80162
900901	08562-80176	08562-80177	08562-80178	08562-80179	08562-80180	08562-80181

Table 4-2. Reference Designations, Abbreviations, and Multipliers (1 of 4)

REFERENCE DESIGNATIONS					
A	Assembly	F	Fuse	RT	Thermistor
AT	Attenuator, Isolator, Limiter, Termination	FL	Filter	S	Switch
		HY	Circulator	T	Transformer
B	Fan, Motor	J	Electrical Connector (Stationary Portion), Jack	TB	Terminal Board
BT	Battery			TC	Thermocouple
C	Capacitor			TP	Test Point
CP	Coupler	K	Relay	U	Integrated Circuit, Microcircuit
CR	Diode, Diode Thyristor, Step Recovery Diode, Varactor	L	Coil, Inductor		
		M	Meter	V	Electron Tube
		MP	Miscellaneous Mechanical Part	VR	Breakdown Diode (Zener), Voltage Regulator
DC	Directional Coupler	P	Electrical Connector (Movable Portion), Plug		
DL	Delay Line			W	Cable, Wire, Jumper
DS	Annunciator, Lamp, Light Emitting Diode (LED), Signaling Device (Visible)			X	Socket
		Q	Silicon Controlled Rectifier (SCR), Transistor, Triode Thyristor	Y	Crystal Unit (Piezoelectric, Quartz)
				Z	Tuned Cavity, Tuned Circuit
E	Miscellaneous Electrical Part	R	Resistor		

ABBREVIATIONS					
	A	BSC	Basic	CNDCT	Conducting, Conductive, Conductivity, Conductor
		BTN	Button		
A	Across Flats, Acrylic, Air (Dry Method), Ampere		**C**		
				CONT	Contact, Continuous, Control, Controller
ADJ	Adjust, Adjustment	C	Capacitance, Capacitor, Center Tapped, Cermet, Cold, Compression		
ANSI	American National Standards Institute (formerly USASI-ASA)			CONV	Converter
				CPRSN	Co mpression
ASSY	Assembly	CCP	Carbon Composition Plastic	CUP-PT	Cup Point
AWG	American Wire Gage			CW	Clockwise, Continuous Wave
		CD	Cadmium, Card, Cord		
	B	CER	Ceramic		
BCD	Binary Coded Decimal	CHAM	Chamfer		
		CHAR	Character, Characteristic, Charcoal		**D**
BD	Board, Bundle				
BE-CU	Beryllium Copper			D	Deep, Depletion, Depth, Diameter, Direct Current
BNC	Type of Connector	CMOS	Complementary Metal Oxide Semiconductor		
BRG	Bearing, Boring				
BRS	Brass			DA	Darlington

Table 4-2. Reference Designations, Abbreviations, and Multipliers (2 of 4)

ABBREVIATIONS					
DAP-GL	Diallyl Phthalate Glass	FT	Current Gain Bandwidth Product (Transition Frequency), Feet, Foot	JFET	Junction Field Effect Transistor
DBL	Double				
DCDR	Decoder				**K**
DEG	Degree				
D-HOLE	D-Shaped Hole	FXD	Fixed	K	Kelvin, Key, Kilo, Potassium
DIA	Diameter				
DIP	Dual In-Line Package		**G**	KNRLD	Knurled
DIP-SLDR	Dip Solder			KVDC	Kilovolts
D-MODE	Depletion Mode	GEN	General, Generator		Direct Current
DO	Package Type Designation	GND	Ground		
		GP	General Purpose, Group		**L**
DP	Deep, Depth, Diametric Pitch, Dip			LED	Light Emitting Diode
DP3T	Double Pole Three Throw		**H**	LG	Length, Long
DPDT	Double Pole Double Throw	H	Henry, High	LIN	Linear, Linearity
		HDW	Hardware	LK	Link, Lock
DWL	Dowell	HEX	Hexadecimal, Hexagon, Hexagonal	LKG	Leakage, Locking
				LUM	Luminous
	E				
		HLCL	Helical		
E-R	E-Ring	HP	Hewlett-Packard Company, High Pass		**M**
EXT	Extended, Extension, External, Extinguish			M	Male, Maximum, Mega, Mil, Milli, Mode
			I		
	F				
		IC	Collector Current, Integrated Circuit	MA	Milliampere
F	Fahrenheit, Farad, Female, Film (Resistor), Fixed, Flange, Frequency			MACH	Machined
		ID	Identification, Inside Diameter	MAX	Maximum
				MC	Molded Carbon Composition
		IF	Forward Current, Intermediate Frequency		
FC	Carbon Film/ Composition, Edge of Cutoff Frequency, Face			MET	Metal, Metallized
				MHZ	Megahertz
		IN	Inch	MINTR	Miniature
		INCL	Including	MIT	Miter
FDTHRU	Feedthrough	INT	Integral, Intensity, Internal	MLD	Mold, Molded
FEM	Female			MM	Magnetized Material, Millimeter
FIL-HD	Fillister Head				
FL	Flash, Flat, Fluid		**J**	MOM	Momentary
FLAT-PT	Flat Point			MTG	Mounting
FR	Front	J-FET	Junction Field Effect Transistor	MTLC	Metallic
FREQ	Frequency			MW	Milliwatt

Table 4-2. Reference Designations, Abbreviations, and Multipliers (3 of 4)

ABBREVIATIONS					
	N	PLSTC	Plastic	SMA	Subminiature,
		PNL	Panel		A Type (Threaded
N	Nano, None	PNP	Positive Negative		Connector)
N-CHAN	N-Channel		Positive (Transistor)	SMB	Subminiature,
NH	Nanohenry	POLYC	Polycarbonate		B Type (Slip-on
NM	Nanometer,	POLYE	Polyester		Connector)
	Nonmetallic	POT	Potentiometer	SMC	Submi niature,
NO	Normally Open,	POZI	Pozidriv Recess		C-Type (Threaded
	Number	PREC	Precision		Connector)
NOM	Nominal	PRP	Purple, Purpose	SPCG	Spacing
NPN	Negative Positive	PSTN	Piston	SPDT	Single Pole
	Negative (Transistor)	PT	Part, Point,		Double Throw
NS	Nanosecond,		Pulse Time	SPST	Single Pole
	Non-Shorting, Nose	PW	Pulse Width		Single Throw
NUM	Numeric			SQ	Square
NYL	Nylon (Polyamide)			SST	Stainless Steel
			Q	STL	Steel
	O			SUBMIN	Subminiature
		Q	Figure of Merit	SZ	Size
OA	Over-All				
OD	Outside Diameter		**R**		
OP AMP	Operational				
	Amplifier	R	Range, Red,		**T**
OPT	Optical, Option,		Resistance, Resistor,		
	Optional		Right, Ring	T	Teeth,
		REF	Reference		Temperatu re,
	P	RES	Resistance, Resistor		Thickness, Time,
		RF	Radio Frequency		Timed, Tooth,
PA	Picoampere, Power	RGD	Rigid		Typical
	Amplifier	RND	Round	TA	Ambient
PAN-HD	Pan Head	RR	Rear		Temperature,
PAR	Parallel, Parity	RVT	Rivet, Riveted		Tantalum
PB	Lead (Metal),			TC	Temperature
	Pushbutton		**S**		Coeffi cient
PC	Printed Circuit			THD	Thread, Threaded
PCB	Printed Circuit	SAWR	Surface Acoustic	THK	Thick
	Board		Wave Resonator	TO	Package Type
P-CHAN	P-Channel	SEG	Segment		Designation
PD	Pad, Power	SGL	Single	TPG	Tapping
	Dissipation	SI	Silicon,	TR-HD	Truss Head
PF	Picofarad, Power		Square Inch	TRMR	Trimmer
	Factor	SL	Slide, Slow	TRN	Turn, Turns
PKG	Package	SLT	Slot, Slotted	TRSN	Torsion

Table 4-2. Reference Designations, Abbreviations, and Multipliers (4 of 4)

ABBREVIATIONS					
	U	VAR	Variable		Y
		VDC	Volts—Direct Current		
UCD	Microcandela			YIG	Yttrium-Iron-Garnet
UF	Microfarad				
UH	Microhenry		W		
UL	Microliter, Underwriters' Laboratories, Inc.	W	Watt, Wattage, White, Wide, Width		Z
UNHDND	Unhardened	W/SW	With Switch	ZNR	Zener
		WW	Wire Wound		
	V				
			X		
V	Variable, Violet, Volt, Voltage	X	By (Used with Dimensions), Reactance		
VAC	Vacuum, Volts—Alternating Current				

MULTIPLIERS					
Abbreviation	Prefix	Multiple	Abbreviation	Prefix	Multiple
T	tera	10^{12}	m	milli	10^{-3}
G	giga	10^{9}	μ	micro	10^{-6}
M	mega	10^{6}	n	nano	10^{-9}
k	kilo	10^{3}	p	pico	10^{-12}
da	deka	10^{2}	f	femto	10^{-15}
d	deci	10^{-1}	a	atto	10^{-18}
c	centi	10^{-2}			

Table 4-3. Manufacturers Code List (1 of 3)

Mfr Code	Manufacturer Name	Address	Country	ZIP Code
C0633	RIFA AB	STOCKHOLM	SW	S-163
C1433	AB ELECKTRONIK GMBH	SALZBURG	AU	A-501
D8350	GROSS A	STUTTGART	GM	7000
D8439	ROEDERSTEIN/RESISTA GMBH	LANDSHUT	GM	8300
K8479	HOLSWORTHYELECTRONICS LTD	HOLSWORTHY	EG	
S0562	TOSHIBA CORP	TOKYO	JP	
00000	ANY SATISFACTORY SUPPLIER			
00471	DOW-KEY CO INC	BRIINFUEKD, WY	US	80020
00494	ADDRESSOGRAPH FARRINGTON	TREVOSE, PA	US	44117
00779	AMP INC	HARRISBURG, PA	US	17111

Table 4-3. Manufacturers Code List (2 of 3)

Mfr Code	Manufacturer Name	Address	Country	ZIP Code
00853	SANGAMO WESTON INC	NORCROSS, GA	US	30071
01121	ALLEN-BRADLEY CO INC	EL PASO, TX	US	79935
01295	TEXAS INSTRUMENTS INC	DALLAS, TX	US	75265
01686	RCL ELECTRONICS INC	NORTHBROOK,IL	US	60062
01766	INTL CRYSTALMFG CO INC	OKLAHOMA CITY, OK	US	73102
02114	FERROXCUBE CORP	SAUGERTIES, NY	US	12477
04222	AVX CORP	GREAT NECK, NY	US	11021
04713	MOTOROLA INC	ROSELLE, IL	US	60195
06001	MEPCO/ELECTRA INC	MORRISTOWN, NJ	US	07960
06132	COMPUTER TERMINAL CORP	SAN ANTONIO, TX	US	78784
06156	BAUM W A CO INC	COPIAGUE, NY	US	11726
06341	PRODUCTS/TECHNIQUES INC	LOS ANGELES, CA	US	90059
06383	PANDUIT CORP	TINLEY PARK, IL	US	60477
06394	HOOVER UNIVERSAL INCBALL & RLR DIV	SALINE, MI	US	68310
06424	SPERRY U-WAVE ELEK DIV SPERRY RAND	CLEARWATER, FL	US	33518
06560	JEFFERS ELECTRONICS INC	NOGALES, AZ	US	85621
06665	PRECISION MONOLITHICS INC	SANTA CLARA, CA	US	95054
07047	MILTON ROSSCO	SOUTHHAMPTON, PA	US	18966
07263	FAIRCHILD SEMICONDUCTOR CORP	CUPERTINO, CA	US	95014
07933	RAYTHEON CO SEMICONDUCTOR DIV HQ	MOUNTAIN VIEW, CA	US	94040
08111	MFELECTRONICS CORP	NEW YORK, NY	US	10010
09535	JOHNSON MATTHEY AND MALLORY LTD	TORONTO	CN	
09969	DALE ELECTRONICS INC	YANKTON, SD	US	57078
1B546	VARO INC	GARLAND, TX	US	75046
10899	EASTERN AIR DEVICES INC	GREAT NECK, NY	US	11021
10960	T D RELECTRONICS INC	BRISTOL, RI	US	02809
11214	HARDIGG IND INC	S DEERFIELD, MA	US	01373
11244	DYMO INDUSTRIES INC	BERKELEY, CA	US	94701
11502	IRC INC	BOONE, NC	US	28607
12344	TALLY CORP	KENT, WA	US	98031
12474	BEL-RAY CO INC	FARMINGDALE, NJ	US	07727
12498	CRYSTALONICS, DIV TELEDYNE	CAMBRIDGE, MA	US	02140
13103	THERMALLOY INC	DALLAS, TX	US	75234
14936	GENERAL INSTRUMENT CORP (DIODE)	HICKSVILLE, NY	US	11802
15003	VALORELECTRONICS INC	SANTA ANA, CA	US	92705
15542	MINI-CIRCUITS LAB	BROOKLYN, NY	US	11235
15818	TELEDYNE SEMICONDUCTOR	MOUNTAIN VIEW, CA	US	94043
16179	M/A-COM INC	BURLINGTON, MA	US	01803
16299	CORNING ELECTRONICS	RALEIGH, NC	US	27604
17856	SILICONIX INC	SANTA CLARA, CA	US	95054
18324	SIGNETICS CORP	SUNNYVALE, CA	US	94086

Table 4-3. Manufacturers Code List (3 of 3)

Mfr Code	Manufacturer Name	Address	Country	ZIP Code
18873	DUPONT E I DE NEMOURS & CO	WILMINGTON, DE	US	19801
19701	MEPCO/CENTRALAB INC	WEST PALM BEACH, FL	US	33407
2M627	ROHM CORP	IRVINE, CA	US	92713
24022	TELEDYNE INC	LOS ANGELES, CA	US	90067
24226	GOWANDA ELECTRONICS CORP	GOWANDA, NY	US	14070
24355	ANALOG DEVICES INC	NORWOOD, MA	US	02062
25403	NV PHILIPS ELCOMA	EINDHOVEN	NE	02876
27014	NATIONAL SEMICONDUCTOR CORP	SANTA CLARA, CA	US	95052
28480	HEWLETT-PACKARD CO CORPORATE HQ	PALO ALTO, CA	US	94304
3L585	RCA CORP	NEW YORK, NY	US	10112
30161	AAVID ENGINEERING INC	LACONIA, NH	US	03247
32159	WEST-CAP ARIZONA	SAN FERNANDO, CA	US	91340
32293	INTERSIL INC	CUPERTINO, CA	US	95014
32997	BOURNS INC	RIVERSIDE, CA	US	92507
33399	TELE-TECH CORP	BOZEMAN, MT	US	59771
34335	ADVANCED MICRODEVICES INC	SUNNYVALE, CA	US	94086
34371	HARRIS CORP	MELBOURNE, FL	US	32901
34649	INTEL CORP	SANTA CLARA, CA	US	95054
50157	MIDWEST COMPONENTS	MUSKEGON, MI	US	49443
52063	EXAR INTEGRATED SYSTEMS INC	SUNNYVALE, CA	US	94086
52763	STETTNER & CO	LAUF	GM	D-856
55719	SNAP-ON TOOLS CORP	KENOSHA, WI	US	53140
55210	GETTIG ENGRG & MFG CO INC	SPRING MILLS, PA	US	16875
55680	NICHICON (AMERICA) CORP	SCHAUMBERG, IL	US	60195
56289	SPRAGUE ELECTRIC CO	LEXINGTON, MA	US	02173
6E259	AMETEK INC	PAOLI, PA	US	19301
73138	BECKMAN INDUSTRIAL CORP	FULLERTON, CA	US	92635
76381	3M CO	ST PAUL, MN	US	55144
78553	TINNERMAN PRODUCTS INC	CLEVELAND, OH	US	44101
83701	ELECTRONIC DEVICES INC	YONKERS, NY	US	10710
84411	AMERICAN SHIZUKI CORP	CANOGA PARK, CA	US	91304
9M011	INTL RECTIFIER CORP	LOS ANGELES, CA	US	90069
9N171	UNITRODE CORP	LEXINGTON, MA	US	02173
91637	DALE ELECTRONICS INC	COLUMBUS, NE	US	68601
98291	SEALECTRO CORP	TRUMBULL, CT	US	06611
99800	AMER PRCN IND INC DELEVAN DIV	AURORA, NY	US	14052
01561	CHASSISTRAK DIV GENERAL DEVICES CO	INDIANAPOLIS, IN	US	46219
10183	GRAHAM MAGNETICS INC	FT WORTH, TX	US	76118
11591	STUART RADIATOR CO	SAN FRANCISCO, CA	US	94107
16179	M/A-COM INC	BURLINGTON, MA	US	01803
16428	COOPER INDUSTRIES INC	HOUSTON, TX	US	77210
24022	TELEDYNE INC	LOS ANGELES, CA	US	90067
24931	SPECIALTY CONNECTOR CO	FRANKLIN, IN	US	46131

Table 4-4. Replaceable Parts (1 of 8)

Reference Designation	HP Part Number	CD	Qty	Description	Mfr Code	Mfr Part Number
				ACCESSORIES SUPPLIED		
	5180-9055	0	1	SUN HOOD	28480	5180-9055
	1810-0118	1	1	TERMINATION-COAXIAL SMA; 0.5W; 50 OHM	16179	2003-6113-02
	1250-0780	5	1	ADAPTER-COAX F-BNC M-N	24931	29JP104-2
	HP 10502A	9	1	50 OHM COAX CABLE WITH BNC MALE	28480	HP 10502A
	8120-2682	2	1	CABLE ASSY-COAX 50-OHM 30PF/FT	28480	8120-2682
	8710-1755	9	3	WRENCH-HEX KEY	55719	AWML4
				OPTION 908		
	5062-4841	5	1	RACK KIT WITH FLANGES		
				(Includes Parts Listed Below)		
	5001-0610	7	2	PANEL-DRESS	28480	5001-0610
	5001-8740	0	2	PANEL-SUB	28480	5001-8740
	5001-8742	2	2	SUPPORT-REAR	28480	5001-8742
	5021-8407	6	2	FRAME-FRONT	28480	5021-8407
	5021-5808	7	2	FRAME-REAR	28480	5021-5808
	5021-5836	1	5	CORNER-STRUT	28480	5021-5836
	0510-1148	2	10	RETAINER-PUSH-ON KB-TO-SHFT EXT	11591	669
	0515-0886	3	16	SCREW-MACH M3 X 0.5 6MM-LG PAN-HD	28480	0515-0886
	0515-0887	4	8	SCREW-MACH M3.5 X 0.6 6MM-LG PAN-HD	28480	0515-0887
	0515-0889	6	12	SCREW-MACH M3.5 X 0.6 6MM-LG	28480	0515-0889
	0515-0904	6	8	SCREW-MACH M5 X 0.8 12MM-LG PAN-HD	28480	0515-0904
	0515-1331	5	22	SCREW-METRIC SPECIALTY M4 X 0.7 THD; 7MM	28480	0515-1331
	5062-3979	2	2	MOUNT FLANGE	28480	5062-3979
	0515-1114	2	6	SCREW-MACH M4 X 0.7 10MM-LG PAN-HD	28480	0515-1114
	8710-1755	9		WRENCH-HEX KEY	55719	AWML4
	5958-6573	0	2	ASSEMBLY INSTRUCTIONS	28480	5958-6573
				OPTION 909		
	5062-1900	8	1	RACK KIT WITH FLANGES AND HANDLES		
				(Includes Parts Listed Below)		
	5001-8739	7		PANEL-DRESS	28480	5001-8739
	5001-8740	0		PANEL-SUB	28480	5001-8740
	5001-8742	2		SUPPORT-REAR	28480	5001-8742
	5021-8407	6		FRAME-FRONT	28480	5021-8407
	5021-5808	7		FRAME-REAR	28480	5021-5808
	5021-5836	1		CORNER STRUT	28480	5021-5836
	0510-1148	2		RETAINER-PUSH-ON KB-TO-SHFT EXT	11591	669
	0515-0886	3		SCREW-MACH M3 X 0.5 6MM-LG PAN-HD	28480	0515-0886
	0515-0887	4		SCREW-MACH M3.5 X 0.6 6MM-LG PAN-HD	28480	0515-0887

Table 4-4. Replaceable Parts (3 of 8)

Reference Designation	HP Part Number	CD	Qty	Description	Mfr Code	Mfr Part Number
				MAJOR ASSEMBLIES		
A1 (HP 8562A)	08562-60072	3	1	FRONT FRAME ASSEMBLY (HP 8562A)	28480	08562-60072
A1 (Opt. 026)	08562-60063	2	1	FRONT FRAME ASSEMBLY (Opt. 026)	28480	08562-60063
A1 (HP 8562B)	08562-60073	4	1	FRONT FRAME ASSEMBLY (HP 8562B)	28480	08562-60073
				(The A1 assembly includes the front frame, front faceplate, front-panel keys, and other hardware. Refer to Figure 4-1 for individual part numbers.)		
A1A1	See Table A-1		1	BD AY-KEYBOARD	28480	See Table A-1
A1A1W1	5061-9027	4	1	CABLE ASSEMBLY, KEYBOARD	28480	5061-9027
A1A2	0960-0745	6	1	RPG ASSEMBLY (Includes Cable)	28480	0960-0745
A2	See Table A-1		1	CONTROLLER ASSEMBLY	28480	See Table A-1
A3	See Table A-1		1	INTERFACE ASSEMBLY	28480	See Table A-1
A4	See Table A-1		1	LOG AMPLIFIER ASSEMBLY	28480	See Table A-1
A5	See Table A-1		1	IF FILTER ASSEMBLY	28480	See Table A-1
A6	See Table A-1		1	POWER SUPPLY ASSEMBLY	28480	See Table A-1
				(Does NOT Include A6A1)		
A6A1	5062-0762	8	1	HIGH VOLTAGE ASSEMBLY	28480	5062-0762
A7	5086-7744	0	1	FIRST LO DISTRIBUTION AMPLIFIER	28480	5086-7744
	5086-6744	8	1	REBUILT A7, EXCHANGE REQUIRED	28480	5086-6744
A8	5086-7838	3	1	DUAL MIXER	28480	5086-7838
	5086-6838	1	1	REBUILT A8, EXCHANGE REQUIRED	28480	5086-6838
A9	5086-7783	7	1	PORT ATTEN 22 GHZ	28480	5086-7783
	5086-6783	5	1	REBUILT A9, EXCHANGE REQUIRED	28480	5086-6783
	5086-7796	2	1	ATTEN, OPT 026	28480	5086-7796
A10	0955-0277	8	1	U-WAVE YIG FILTER 22 GHZ MAX	28480	0955-0277
	0955-0421	4	1	YIG FILTER, OPT 026	28480	0955-0421
	5086-7850	9	1	YIG FILTER, OPT 026	28480	5086-7850
A11	5086-7781	5	1	PORTABLE LVLD YTO	28480	5086-7781
	5086-6781	3	1	REBUILT A11 EXCHANGE REQUIRED	28480	5086-6781
A12	3106-0029	2	1	U-WAVE SWITCH-COAXIAL 22 GHZ MAX	24022	CS-33S9D-5
	3106-0022	5	1	U-WAVE SWITCH-COAXIAL, OPT 026	28480	3106-0022
A13	5086-7812	3	1	SECOND CONVERTER	28480	5086-7812
	5086-6752	8	1	REBUILT A13, EXCHANGE REQUIRED	28480	5086-6752
A14	See Table A-1		1	FREQUENCY CONTROL ASSEMBLY	28480	See Table A-1
				(Includes A14A101, 102, and 103)		
A15	See Table A-1		1	RF ASSEMBLY	28480	See Table A-1
A15 (Option 001)	See Table A-1		1	RF ASSEMBLY	28480	See Table A-1

Table 4-4. Replaceable Parts (2 of 8)

Reference Designation	HP Part Number	CD	Qty	Description	Mfr Code	Mfr Part Number
	0515-0889	6		SCREW-MACH M3.5 X 0.6 6MM-LG	28480	0515-0889
	0515-1241	6		SCREW-MACH M5 X 0.8 12MM-LG PAN-HD	28480	0515-1241
	0515-1331	5		SCREW-METRIC SPECIALTY M4 X 0.7 THD; 7MM	28480	0515-1331
	5061-9501	9	2	FRONT HANDLE ASS'Y	28480	5061-9501
	5061-9685	0	2	MOUNT FLANGE	28480	5061-9685
	0515-1106	2	6	SCREW-MACH M4 X 0.7 16MM-LG PAN-HD	28480	0515-1106
	8710-1755	9		WRENCH-HEX KEY	55719	AWML4
	5958-6573	0		ASSEMBLY INSTRUCTIONS	28480	5958-6573
				RACK-SLIDE KIT		
	1494-0060	0	1	SLIDE-CHAS 25-IN-LG 21.84-IN-TRVL	01561	C858-2
				(Slides, Not Sold Separately, Include Parts Listed Below)		
	0515-0949	9	4	SCREW-MACH M5 X 0.8 14MM-LG PAN-HD	28480	0515-0949
	0515-1013	0	4	SCREW-MACH M4 X 0.7 12MM-LG	28480	0515-1013
	0515-0909	1	4	SCREW-MACH M4 X 0.7 12MM-LG PAN-HD	28480	0515-0909
	0535-0080	1	8	NUT-CHANNEL M4 X 0.7 3.5MM-THK 10.3MM-WD	28480	0535-0080

Table 4-4. Replaceable Parts (4 of 8)

Reference Designation	HP Part Number	CD	Qty	Description	Mfr Code	Mfr Part Number
A15A1	5086-7751	9	1	SECOND IF AMP	28480	5086-7751
A15A2	5086-7750	8	1	SAMPLER	28480	5086-7750
A16	See Table A-1		1	CAL OSCILLATOR ASSEMBLY	28480	See Table A-1
A17	See Table A-1	2	1	CRT DRIVER ASSEMBLY	28480	See Table A-1
A18				CRT ASSEMBLY (Order by Individual Parts)		
A18MP1	5062-0745	7	1	CRT WIRING ASSEMBLY (Includes Shield, A18L1, and A18W1)	28480	5062-0745
A18MP2	5041-3987	1	1	SPACER, CRT	28480	5041-3987
A18V1	5083-6451	8	1	TUBE, CRT 6.7 IN	28480	5083-6451
A18W1				CABLE ASSEMBLY, TWO WIRE, TRACE (P/O A18MP1, A17J5 TO A18L1)		
A19	See Table A-1		1	HP-IB ASSEMBLY	28480 y	See Table A-1
A19W1	5061-9031	0	1	CABLE ASSEMBLY, RIBBON, HP-IB (A2J5 to Rear Panel J2)	28480	5061-9031
A20	5062-0797	9	1	BATTERY ASSY (Includes W6, BT1)	28480	5062-0797
AT1	0955-0400	9	1	(HP 8562B) 5 DB ATTENUATOR, W46 TO A8J3	28480	0955-0400
B1	5061-9036	5	1	FAN ASSEMBLY (Includes Wire)	28480	5061-9036
BT1	1420-0315	3	1	BATTERY 3.4V 1.7A-HR LITHIUM THIONYL	10183	TL-5104/S
F1	1429-0341 2110-0709	3	1	FUSE 5A 250V NTD FE IEC (230 VAC Operation)	16428	GDA-5
F1	2110-0756	0	1	FUSE 5A 125V NTD UL (115 VAC Operation)	28480	2110-0756
FL1	0955-0420	3	1	LOW PASS FILTER	28480	0955-042
FL2	0905-0519	6	1	LOW PASS FILTER, A8J2 TO A13J1	28480	0905-0519
FL3	9135-0308	7	1	LOW PASS FILTER, A8J5 TO A13J3 (Not used with A13 5086-7812)	28480	9135-0308
FL4	5061-9032	1	1	LINE FILTER ASSEMBLY	28480	5061-9032
LS1	9160-0282	9	1	LOUDSPEAKER 2.5 IN SQ (Part of W5)	28480	9160-0282

Old Cable/Filter 9135-0307
Use Kit 5062-8226 (Filter, 2 cables: 5022-0049, 5022-0050

Table 4-4. Replaceable Parts (5 of 8)

Reference Designation	HP Part Number	CD	Qty	Description	Mfr Code	Mfr Part Number
				CHASSIS MECHANICAL PARTS		
				(See Figures 4-1 through 4-6 for a complete listing of mechanical chassis parts)		
				ASSEMBLY SHIELDS		
A3 Assembly	5021-6723	7	1	PEAK DETECTOR (TOP)	28480	5021-6723
	5021-6724	8	1	PEAK DETECTOR (BOTTOM)	28480	5021-6723
	1390-0745	8	2	SCREW CPT M2.5 14L	28480	1390-0745
	1390-0746	9	10	SCREW CPT M2.5 9.5L	28480	1390-0746
A4 Assembly	5021-6725	9	1	AMP 1 (BOTTOM)	28480	5021-6725
	5021-6726	0	1	AMP 1 (TOP)	28480	5021-6726
	5021-6727	1	1	AMP 2 (TOP)	28480	5021-6727
	5021-6728	2	1	AMP 2 (BOTTOM)	28480	5021-6728
	1390-0745	8	24	SCREW CPT M2.5 14L	28480	1390-0745
A5 Assembly	5021-6729	3	1	IF 1 (TOP)	28480	5021-6729
	5021-6730	6	1	IF 1 (BOTTOM)	28480	5021-6730
	5021-6731	7	1	IF 2 (TOP)	28480	5021-6731
	5021-6732	8	1	IF 2 (BOTTOM)	28480	5021-6732
	0515-0951	3	16	SCREW 5MM 2.5 16 PNPDS	28480	0515-0951
	0905-0375	2	16	O-RING .070ID	28480	0905-0375
	8160-0488	6	16	WSHR LK MS.5 ID	28480	8160-0488
A14 Assembly	5021-6733	9	1	RLR OSC (TOP)	28480	5021-6733
	5021-6734	0	1	RLR OSC (BOTTOM)	28480	5021-6734
	0515-0951	3	13	SCREW 5MM 2 5 16 PNPDS	28480	0515-0951
	0905-0375	2	13	O-RING .070ID	28480	0905-0375
	8160-0488	6	13	WSHR LK MS.5 ID	28480	8160-0488
A15 Assembly	5021-6735	1	1	REF (TOP)	28480	5021-6735
	5021-6736	2	1	REF (BOTTOM)	28480	5021-6736
	5021-6737	3	1	SYNTHZR (TOP)	28480	5021-6737
	5021-6738	4	1	SYNTHZR (BOTTOM)	28480	5021-6738
	5021-6739	5	1	SIGPATH (TOP)	28480	5021-6739
	5021-6740	8	1	SIGPATH (BOTTOM)	28480	5021-6740
	0515-0951	3	33	SCREW 5MM 2.5 16 PNPDS	28480	0515-0951
	0905-0375	2	33	O-RING .070ID	28480	0905-0375
	8160-0488	6	33	WSHR LK MS.5 ID	28480	8160-0488
A16 Assembly	5021-6741	9	1	CAL OSC (TOP)	28480	5021-6741
	5021-6742	0	1	CAL OSC (BOTTOM)	28480	5021-6742
	0515-0951	3	2	SCREW 5MM 2.5 16 PNPDS	28480	0515-0951
	0905-0375	2	2	O-RING .070ID	28480	0905-0375
	8160-0488	6	2	WSHR LK MS.5 ID	28480	8160-0488

Table 4-4. Replaceable Parts (6 of 8)

Reference Designation	HP Part Number	CD	Qty	Description	Mfr Code	Mfr Part Number
				CABLE ASSEMBLIES		
W1	5061-9024	1	1	POWER CABLE, RIBBON	28480	5061-9024
W2	5061-9025	2	1	CONTROL CABLE, RIBBON	28480	5061-9025
W3	5062-0728	6	1	CABLE ASSEMBLY LINE SWITCH	28480	5062-0728
W4	5061-9033	2	1	CABLE ASSEMBLY, RIBBON, OPTION MODULE (A2J6 to Rear Panel J3)	28480	5061-9033
W5	5061-9035	4	1	CABLE ASSEMBLY, AUDIO (A16J102 to LS1J1 and Rear Panel J1) (Includes LS1)	28480	5061-9035
W6	5062-0767	3	1	CABLE ASSEMBLY, BATTERY (A2J9 to Rear Panel Battery Holder)	28480	5062-0767
W7	5061-9034	3	1	CABLE ASSEMBLY, RIBBON, DISPLAY/CAL OSC (A2J3 to A16J3 and A17J1)	28480	5061-9034
W8	5061-9030	9	1	CABLE ASSEMBLY, DISPLAY POWER (A6J4 to A17J2)	28480	5061-9030
W9	5062-0755	9	1	CABLE ASSEMBLY, CRT YOKE (A17J3 and J7 to A18V1)	28480	5062-0755
W10	5062-0742	4	1	CABLE ASSEMBLY, RIBBON, A11 YTO DRIVE (A14J3 to A11J1)	28480	5062-0742
W11	5062-0741	3	1	CABLE ASSEMBLY, RIBBON, A9 ATTEN. DRIVE (A14J6 to A9)	28480	5062-0741
W12	5062-0740	2	1	CABLE ASSEMBLY, A7 LODA DRIVE (A14J10 to A7) (Part of Cable Assembly-Microcircuit, 08562-60045 [8562A] or 08562-60046 [8562B])	28480	5062-0740
W13	5062-0743	5	1	CABLE ASSEMBLY, RIBBON, A13 2ND CONV. DRIVE (A14J12 to A13) (Part of Cable Assembly-Microcircuit, 08562-60045 [8562A] or 08562-60046 [8562B])	28480	5062-0743
W14	08562-60019	8	1	CABLE ASSEMBLY, A12 RF SWITCH DRIVE (A14J8 to A12) (Part of Cable Assembly-Microcircout, 08562-60045 [8562A] or 08562-60046 [8562B])	28480	08562-60019
W15	08562-60017	6	1	CABLE ASSEMBLY, A8 DUAL MIXER DRIVE (A14J11 to A8) (Part of Cable Assembly-Microcircuit, 08562-60045 [8562A] or 08562-60046 [8562B])	28480	08562-60017

Table 4-4. Replaceable Parts (7 of 8)

Reference Designation	HP Part Number	CD	Qty	Description	Mfr Code	Mfr Part Number
W16 (HP 8562A)	08562-60018	7	1	CABLE ASSEMBLY, A10 YTF DRIVE (A14J9 to A10) (Part of Cable Assembly-Microcircuit, 08562-60045)	28480	08562-60018
W17	5062-0708	2	1	CABLE ASSEMBLY, COAX 84, 10 MHZ REF-2, (A15J304 to A16J1)	28480	5062-0708
W18	5062-0721	9	1	CABLE ASSEMBLY, COAX 97, LO SWEEP 0.5 V/GHZ (A14J7 to Rear Panel J8)	28480	5062-0721
W19 (Option 001)	5062-0723	1	1	CABLE ASSEMBLY, COAX 83, 2ND IF OUT (A15J803 to Rear Panel J10)	28480	5062-0723
W20	5062-0717	3	1	CABLE ASSEMBLY, COAX 6, O SPAN VIDEO (A3J103 to A2J4)	28480	5062-0717
W21	5062-0715	1	1	CABLE ASSEMBLY, COAX 1, FREQ. COUNTER (A4J4 to A2J7)	28480	5062-0715
W22	5062-0709	3		CABLE ASSEMBLY, COAX 0, 10 MHZ FREQ COUNT (A15J302 to A2J8)	28480	5062-0709
W23	5062-0719	5	1	CABLE ASSEMBLY, COAX 93, EXT TRIG IN (Rear Panel J5 to A3J600)	28480	5062-0719
W24	5062-0720	8	1	CABLE ASSEMBLY, COAX 5, VIDEO OUT (A3J102 to Rear Panal J4)	28480	5062-0720
W25	5062-0718	4	1	CABLE ASSEMBLY, COAX 4, BLANKING OUT (A3J601 to Rear Panel J6)	28480	5062-0718
W26	5062-0716	2	1	CABLE ASSEMBLY, COAX 2, VIDEO (A4J6 to A3J101)	28480	5062-0716
W27	5062-0714	0	1	CABLE ASSEMBLY, FILTER 10.7 MHZ (A5J5 to A4J3)	28480	5062-0714
W28	5062-0713	9	1	CABLE ASSEMBLY, COAX 96, AM/FM DEMOD (A4J5 to A16J101)	28480	5062-0713
W29	5062-0711	7	1	CABLE ASSEMBLY, COAX 7, 10.7 IF (A15J601 to A5J3)	28480	5062-0711
W30	5062-0712	8	1	CABLE ASSEMBLY, COAX 9, 10.7 CAL SIG (A16J2 to A5J4)	28480	5062-0712
W31	5062-0722	0	1	CABLE ASSEMBLY, COAX 8, REF IN/OUT (A15J301 to Rear Panel J9)	28480	5062-0722
W32	5062-0705	9	1	CABLE ASSEMBLY, COAX 87, SAMPLER IF (A15J101 to 14J501)	28480	5062-0705
W33	5062-0706	0	1	CABLE ASSEMBLY, COAX 81, 2ND LO DRIVE (A15J701 to A13J4)	28480	5062-0706
W34	5062-0761	7	1	CABLE ASSEMBLY, COAX 0, 1ST LO SAMP. (A7J4 to A15A2J1)	28480	5062-0761

Table 4-4. Replaceable Parts (8 of 8)

Reference Designation	HP Part Number	CD	Qty	Description	Mfr Code	Mfr Part Number
W35	5062-0710	6	1	CABLE ASSEMBLY, COAX 92, INT 2ND IF (A13J2 to A15J801)	28480	5062-0710
W36	5062-0725	3	1	CABLE ASSEMBLY, COAX 86, EXT 2ND IF (Front Panel J3 to A15J802)	28480	5062-0725
W37	5062-0707	1	1	CABLE ASSEMBLY, COAX 85, 10 MHZ REF 1 (A15J303 to A14J301)	28480	5062-0707
W38	5021-6704	4	1	CABLE ASSEMBLY, SEMI-RIGID, 1ST LO (A11J2 to A7J1)	28480	5021-6704
W39	08562-20019	4	1	CABLE ASSEMBLY, SEMI-RIGID, 1ST MXR LO (A7J2 to A8J4)	28480	08562-20019
W40	5062-0724	2	1	CABLE ASSEMBLY, COAX 89, CAL OUT (A15J501 to Front Panel J5)	28480	5062-0724
W41	5021-~~6349~~ 8635	3	1	CABLE ASSEMBLY, SEMI-RIGID, RF INPUT (Front panel J1 to A9J1)	28480	5021-6349
W41 (Option 026)	5021-7481	6	1	CABLE ASSEMBLY, SEMI-RIGID, RF INPUT (Front panel J1 to A9J1)	28480	5021-7481
W42	5021-6705	5	1	CABLE ASSEMBLY, SEMI-RIGID, 1ST LO OUT (A7J3 to Front Panel J4)	28480	5021-6705
W43	08562-20014	9	1	CABLE ASSEMBLY, SEMI-RIGID (A9J2 to A12J3)	28480	08562-20014
W44	08562-20016	1	1	CABLE ASSEMBLY, SEMI-RIGID (A12J2 to FL1J1)	28480	08562-20016
W45	5021-6706	6	1	CABLE ASSEMBLY, SEMI-RIGID (FL1J2 to A8J1)	28480	5021-6706
W46 (HP 8562A)	08562-20015	0	1	CABLE ASSEMBLY, SEMI-RIGID (A12J1 to A10J1)	28480	08562-20015
W46 (HP 8562B)	08562-20024	1	1	CABLE ASSEMBLY, SEMI-RIGID, (A12J1 to AT1)	28480	08562-20024
W47 (HP 8562A)	1250-1159	4	1	CABLE ASSEMBLY, SMA ADAPTER, (A10J7 to A8J3)	28480	1250-1159
W48 (HP 8562A)	5021-9~~3~~6~~09~~	1	1	CABLE ASSEMBLY, SEMI-RIGID (A8J5 to A~~8~~13J3)	28480	5021-9309
W49 (OPT 003/013)	5062-0723	1	1	CABLE ASSEMBLY-COAX, 82 OCXO OUT	28480	5062-0723
W50 (OPT 003/013)	5062-4891	3	1	CABLE ASSEMBLY-RIBBON OCXO PWR	28480	5062-4891
	08562-60045	0	1	CABLE ASSEMBLY-MICROCIRCUIT 8562A (Includes W12, W14, W15 & W16)	28480	08562-60045
	08562-60046	1	1	CABLE ASSEMBLY-MICROCIRCUIT 8562B (Includes W12, W14 & W15)	28480	08562-60046

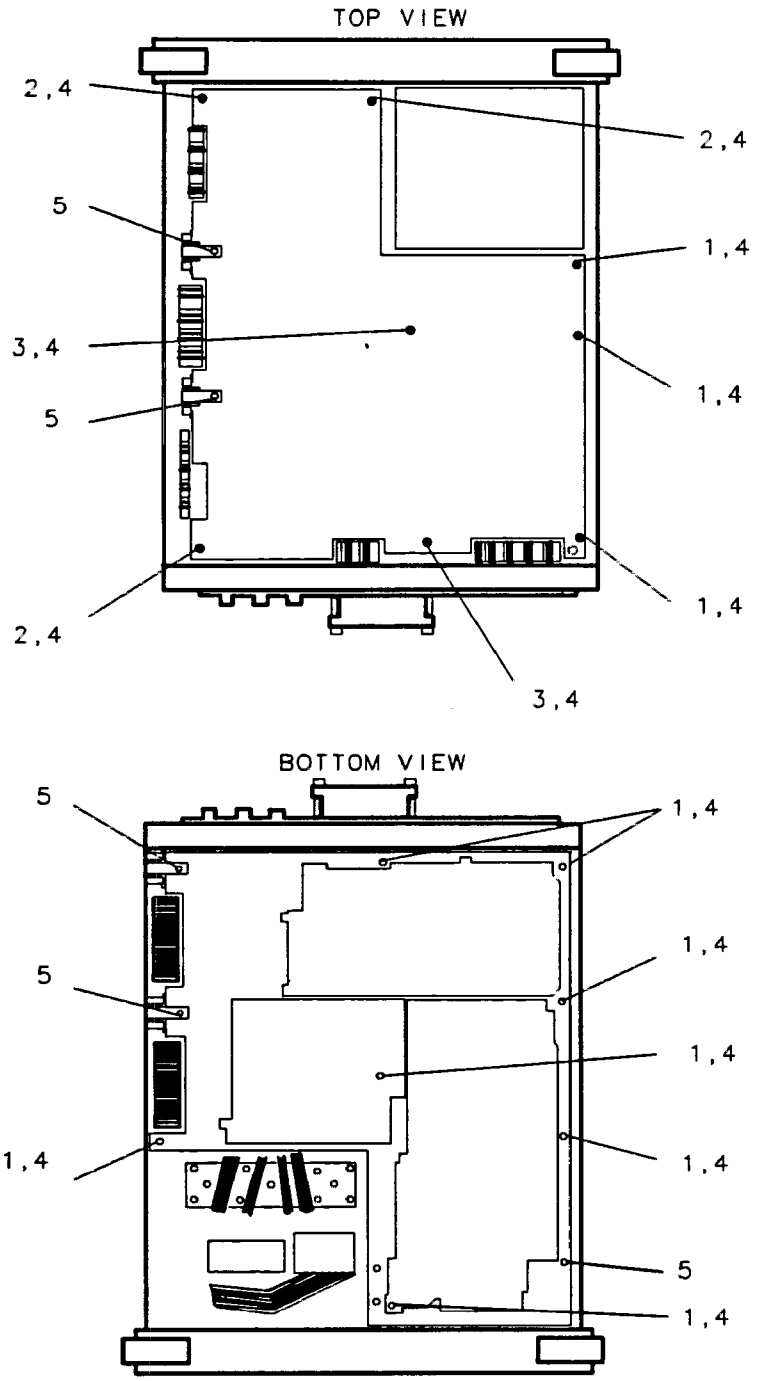

Figure 4-1. Parts Identification, Assembly Mounting (1 of 2)

Item	HP Part Number	CD	Description	Qty	Mfr Code	Mfr Part Number
1	0515-1323	5	11	SCREW-MACH M3 X 0.5 30MM-LG PAN-HD	28480	0515-1323
2	0515-1646	5	3	SCREW-MACH M3 X 0.5 60MM-LG PAN-HD	28480	0515-1646
3	0515-1647	6	2	SCREW-MACH M3 X 0.5 100MM-LG PAN-HD	28480	0515-1647
4	3050-0105	6	15	WASHER-FL MTLC NO. 4 .125-IN-ID	28480	3050-0105
5	0515-0886	3	13	SCREW-MACH M3 X 0.5 6MM-LG PAN-HD	28480	0515-0886

Figure 4-1. Parts Identification, Assembly Mounting (2 of 2)

Item	HP Part Number	CD	Description	Qty	Mfr Code	Mfr Part Number
1	5041-8911	1	1	BAIL HANDLE	28480	5041-8911
2	5041-8912	2	2	TRIM CAP	28480	5041-8912
3	0515-1114	2	4	SCREW MACH M4 X 0.7 10MM-LG PAN-HD	28480	0515-1114
4	1460-2164	0	2	SPRING-CPRSN .845 IN-OD 1.25-IN-OA-LG	28480	1460-2108
5	5021-6343	7	2	RING GEAR	28480	5021-6343
6	5021-6344	8	2	SOCKET GEAR	28480	5021-6344
7	5021-8667	4	2	HANDLE PLATE	28480	5021-8667
8	5001-8728	4	2	BACKUP PLATE	28480	5001-8728
9	0515-1367	0	6	SCREW MACH M4 X 0.7 8MM-LG 90DEG-FLH-HD	28480	0515`1397
10	0515-1133	5	2	SCREW-MACH M5 X 0.8 16MM-LG	28480	0515-1133
11	5001-8800	3	1	COVER	28480	5001-8800
12	5041-7238	3	1	MOISTURE DEFLECTOR-LF	28480	5041-7238
13	5041-3989	3	1	MOISTURE DEFLECTOR-RT	28480	5041-3989
14	5041-8913	3	2	SIDE TRIM	28480	5041-8913
15	0515-1114	2	2	SCREW-MACH M4 X 0.7 10MM-LG PAN-HD	28480	0515-1114
16	5041-8907	5	2	REAR FOOT	28480	5041-8907
17	0900-0024	8	4	O-RING .145`IN-XSECT-DIA SIL	51633	AS568-007
18	2190-0587	3	4	WASHER-LK HLCL 5.0 MM 5.1-MM-ID	28480	2190-0587
19	0515-1218	7	4	SCREW-SKT-HD-CAP M5 X 0.8 40MM-LG	28480	0515-1218
20	08562-80028	1	1	INSULATOR 292 X 355 MM .51 THK	28480	08562-80028
	5062-484			Cover Asy.		

Figure 4-2. Parts Identification, Cover Assembly (1 of 2)

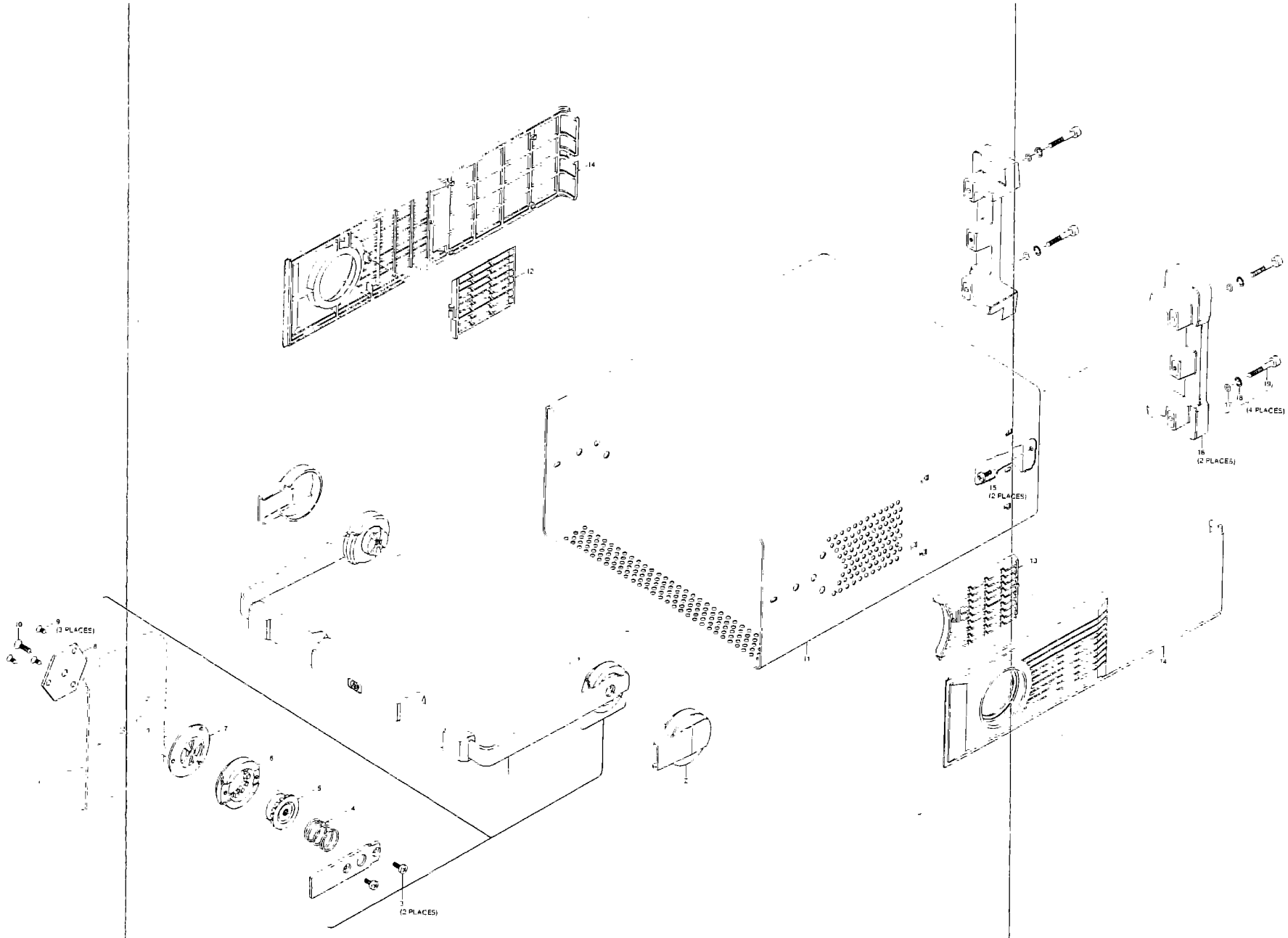

Figure 4-2. Parts Identification, Cover Assembly (2 of 2)

Item	HP Part Number	CD	Description	Qty	Mfr Code	Mfr Part Number
1	0515-1079	3	4	SCREW`MACH M3 X 0.5 8MM-LG PAN-HD SEM	28480	0515-1079
2	5180-9023	2	3	SMM 3.0 35 PCPDS	28480	5180-9023
3	0515-1826	0	3	SCREW-MACH M3 X 0.5 35MM-LG PAN-HD SEM	28480	0515-1826
4	3050-0891	7	3	WASHER-FL MTLC NO.4 .125-IN-ID	28480	3050-0891
5	5062-1992	8	1	COVER, A6 POWER SUPPLY (Includes label)	28480	5062-1992
6	0515-1590	8	3	SCREW-MACH M3 X 0.5 45MM-LG	28480	0515-1590
7	5041-7246	3	1	BOARD MOUNT	28480	5041-7246
8	0515-1079	3	4	SCREW-MACH M3 X 0.5 8MM-LG PAN-HD SEM	28480	0515-1079
9	5041-7249	6	1	COVER, A17	28480	5041-7249
10	5021-5486	7	2	CRT MOUNT	28480	5021-5486
11	5001-5870	1	2	CRT MOUNT STRAP	28480	5001-5870
12	3050-0891	7	3	WASHER-FL MTLC NO.4 .125-IN-ID	28480	3050-0891
13	0515-1079	3	4	SCREW-MACH M3 X 0.5 8MM-LG PAN-HD SEM	28480	0515-1079
14	5001-8705	7	1	MAIN DECK	28480	5001-8705
15	5001-5872	3	1	FRONT END DECK	28480	5001-5872
16	0515-1367	7	4	SCREW-MACH M4 X 0.7 8MM-LG 90DEG-FLH-HD	28480	0515-1367
17	0515-1461	9	2	SCREW MACH M3 X O.5 6MM-LG 90DEG-FLH-HD	28480	0515-1461
18	5021-7464	5	1	SIDE FRAME	28480	5021-7464
19	0515-1367	7	4	SCREW-MACH M4 X 0.7 8MM-LG 90DEG-FLH-HD	28480	0515-1367
20	0515-1461	9	2	SCREW MACH M3 X O.5 6MM-LG 90DEG-FLH-HD	28480	0515-1461
21	0515-1461	9	2	SCREW MACH M3 X O.5 6MM-LG 90DEG-FLH-HD	28480	0515-1461
22	0515-1461	9	2	SCREW MACH M3 X O.5 6MM-LG 90DEG-FLH-HD	28480	0515-1461
23	5021-5484	5	5	MOUNTING POST	28480	5021-5484
24	5062-0750	4	2	HINGE, 2 BOARD	28480	5062-0750
25	5062-0751	5	2	HINGE, 4 BOARD	28480	5062-0751
26	5041-7250	9	1	CABLE CLAMP	28480	5041-7250
27	0515-1010	7	2	SCREW- MACH M3 X 0.5 35MM-LG	28480	0515-1010
28	0515-1461	2	2	SCREW-MACH M3 X 0.5 6MM-LG 90DEG-FLH-HD	28480	0515-1461
29	3050-0894	0	1	WASHER-FL M5 .0ID	28480	3050-0894
30	5062-6461	6	2	GROMMET, NYLON	28480	5062-6461
A18MP1	5062-0745	7	1	CRT WIRING ASSY (INCLUDES A18L1, A18W1)	28480	5062-0745
A18MP2	5041-3987	1	1	SPACER, CRT	28480	5041-3987
A18V1	5083-6451	8	1	TUBE, CRT	28480	5083-6451
A18W1				P/O A18MP1		

Figure 4-3. Parts Identification, Main Chassis (1 of 2)

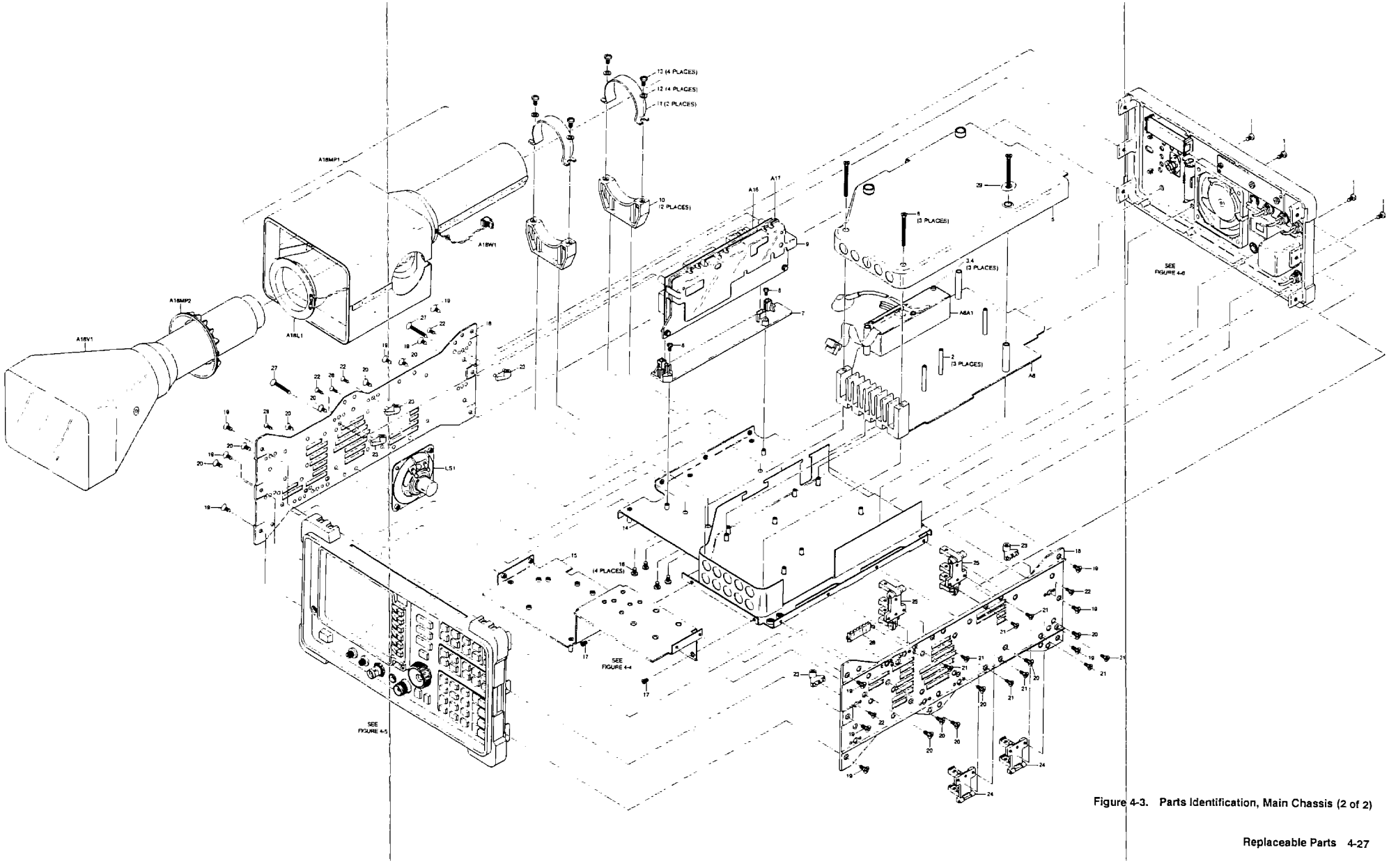

Figure 4-3. Parts Identification, Main Chassis (2 of 2)

Item	HP Part Number	CD	Description	Qty	Mfr Code	Mfr Part Number
1	0515-0886	3	2	SCREW-MACH M3 X 0.5 6MM-LG PAN-HD	28480	0515-0886
2	0515-0886	3	2	SCREW-MACH M3 X 0.5 6MM-LG PAN-HD	28480	0515-0886
3	0515-0886	3	2	SCREW-MACH M3 X 0.5 6MM-LG PAN-HD	28480	0515-0886
4	5021-6749	7	1	FILTER CLAMP	28480	5021-6749
5 (HP 8562A)	08562-20025	3	1	YTF SPACER	28480	08562-20025
(Option 026)	08562-20060	5	1	YTF SPACER	28480	08562-20060
6	0515-0886	3	4	SCREW-MACH M3 X 0.5 6MM-LG PAN-HD	28480	0515-0886
7	5001-8705	7	1	MAIN DECK	28480	5001-8705
8	0515-0890	9	2	SCREW-MACH M3 X 0.5 6MM-LG 90DEG-FLH-HD	28480	0515-0890
9	5001-8755	7	1	FRONT END DECK	28480	5001-8755
10	0515-0890	9	2	SCREW-MACH M3 X 0.5 6MM-LG 90DEG-FLH-HD	28480	0515-0890
11 (HP 8562A)	2360-0507	8	4	SCREW-MACH 6-32 1.625-INLG 82 DEG	28480	2360-0507
(Option 026)	08562-20061	6	4	SCREW-MACK 6-32 1.5-INLG 82 DEG	28480	08562-20061
12	2360-0183	6	4	SCREW-MACH 6-32 .375-IN-LG 82DEG	28480	2360-0183
13	0515-0866	9	1	SCREW-MACH M3 X 0.5 8MM-LG PAN-HD	28480	0515-0866
14	0515-1146	0	2	SCREW-MACH M3 X 0.5 6MM-LG PAN-HD	28480	0515-1146
15	5001-8731	9	1	ATTENUATOR BRACKET	28480	5001-8731
16	0515-1057	2	2	SCREW-MACH M2.5 X .45 18MM-LG PAN-HD	28480	0515-1057
17	08562-00001	2	1	RF SWITCH BRACKET	28480	08562-00001
18	5001-8730	8	1	ATTENUATOR BRACKET	28480	5001-8730
19	0515-0886	3	2	SCREW-MACH M3 X 0.5 6MM-LG PAN-HD	28480	0515-0886
20	0515-1461	9	2	SCREW-MACH M3 X 0.5 6MM-LG SEM FLHD	28480	0515-1461
21	0515-0890	9	2	SCREW-MACH M3 X 0.5 6MM-LG SEM FLHD	28480	0515-0890
22	0515-1461	9	4	SCREW-MACH M3 X 0.5 6MM-LG SEM FLHD	28480	0515-1461
23	2190-0004	9	2	WASHER-LK .115ID 4	28480	2190-0004

Figure 4-4. Parts Identification, RF Section (1 of 2)

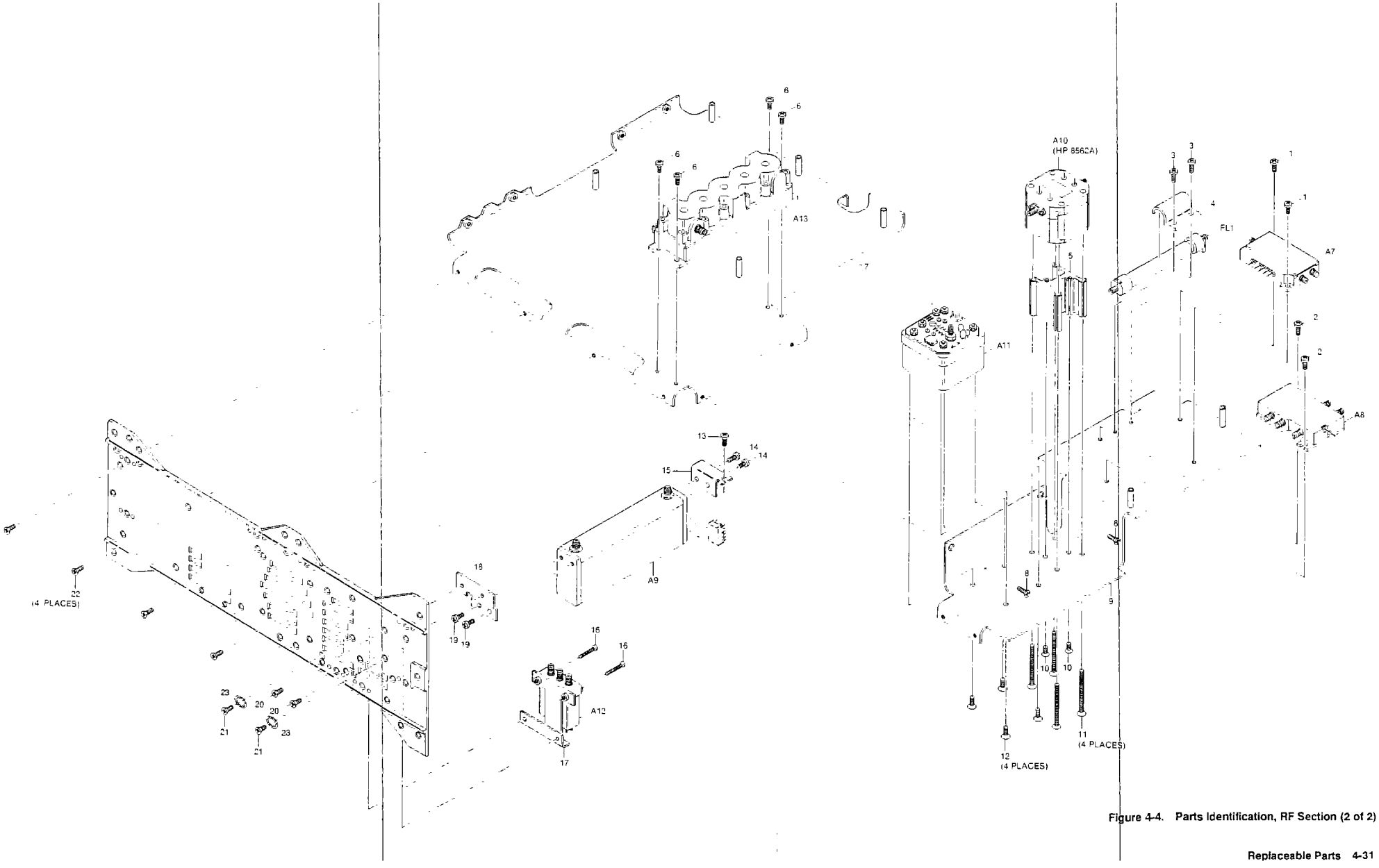

Figure 4-4. Parts Identification, RF Section (2 of 2)

Item	HP Part Number	CD	Description	Qty	Mfr Code	Mfr Part Number
1	0515-1622	7	4	SCREW-SKT-HD-CAP M4 X 0.7 8MM-LG	28480	0515-1622
2	5041-8906	4	1	CRT BEZEL	28480	5041-8906
3	8160-0270	4	1	RFI CRT FACEPLATE PLSTC-MET-CTD AU-PL	28480	8160-2750
4	0370-3069	2	1	KNOB BASE 1-1/8 JGK .252-IN-ID	28480	0370-3069
				(INCLUDES ITEM 5)		
5	3030-0022	4	2	SCREW-SET 6-32 .125-IN-LG SMALL CUP-PT	00000	BY DESCRIPTION
6	2950-0043	8	2	NUT-HEX-DBL-CHAM 3/8-32-THD .094-IN-THK	00000	BY DESCRIPTION
7	2190-0016	3	2	WASHER-LK INTL T 3/8 IN .377-IN-ID	28480	2190-0016
8 (HP 8562A)	08562-00013	0	1	FRONT PANEL-DRESS	28480	08562-00013
(HP 8562B)	08562-00014	4	1	FRONT PANEL DRESS	28480	08562-00014
(Option 026)	08562-00015	5	1	FRONT PANEL-DRESS	28480	08562-00015
9	5060-0467	6	1	PROBE POWER JACK	28480	5060-0467
10	0590-1251	6	1	NUT-SPCLY 15/32-32-THD .1-IN-THK .562-WD	00000	BY DESCRIPTION
11	1250-1753	4	2	ADAPTOR COAX STR F-SMA F-SMA	28480	1250-1753
12	0515-0897	6	6	SCREW-MACH M3 X 0.5 8MM-LG PAN-HD	28480	0515-0897
13	5062-4806	6	1	BUMPER KIT (Includes 4 bumpers)	28480	5062-4806
14				NOT ASSIGNED		
15	5021-5483	4	2	CATCH LATCH	28480	5021-5483
16	0515-0894	3	13	SCREW-MACH M2.5 X 0.45 6MM-LG PAN-HD	28480	0515-0894
17	5021-8689	5	1	FRONT FRAME	28480	5021-8689
18	8160-0520	7	1	RFI ROUND STRIP STL MSH/SIL RBR CU/SN	28480	8160-0520
19	0510-1148	2	2	RETAINER-PUSH ON KB-TO-SHFT EXT	28480	0510-1148
20	5041-3952	0	1	KEY "(.)" DECREASE VOLUME	28480	5041-3952
21	5041-3953	1	1	KEY "(.)" INCREASE VOLUME	28480	5041-3953
22	5041-3948	4	1	KEY "BK SP"	28480	5041-3948
23	5041-3940	6	1	KEY "."	28480	5041-3940
24	5041-3939	3	1	KEY "0"	28480	5041-3939
25	5041-3941	7	1	KEY "1"	28480	5041-3941
26	5041-3942	8	1	KEY "2"	28480	5041-3942
27	5041-3943	9	1	KEY "3"	28480	5041-3943
28	5041-3944	0	1	KEY "4"	28480	5041-3944
29	5041-3945	1	1	KEY "5"	28480	5041-3945
30	5041-3954	2	1	KEY "6"	28480	5041-3954
31	5041-3946	2	1	KEY "7"	28480	5041-3946
32	5041-3947	3	1	KEY "8"	28480	5041-3947
33	5041-3954	2	2	KEY "9"	28480	5041-3954
34	5041-3958	6	1	KEY "ON"	28480	5041-3958
35	5041-3959	7	1	KEY "OFF"	28480	5041-3959
36	5041-3950	8	1	KEY "MKR `>>"	28480	5041-3950
37	5041-3949	5	1	KEY "PEAK SEARCH"	28480	5041-3949

Figure 4-5. Parts Identification, Front Frame (1 of 3)

Item	HP Part Number	CD	Description	Qty	Mfr Code	Mfr Part Number
38	5041-3977	9	1	KEY "SWEEP"	28480	5041-3977
39	5041-3967	7	1	KEY "AUTO COUPLE"	28480	5041-3967
40	5041-3972	4	1	KEY "BW"	28480	5041-3972
41	5041-3973	5	1	KEY "TRACE"	28480	5041-3973
42	5041-3976	8	1	KEY "TRIG"	28480	5041-3976
43	5041-3974	6	1	KEY "DISPLAY"	28480	5041-3974
44	5041-3957	5	1	KEY "PRESET"	28480	5041-3957
45	5041-3963	3	1	KEY "FREQ COUNT"	28480	5041-3963
46	5041-3975	7	1	KEY "DEMOD"	28480	5041-3975
47	5041-3964	4	1	KEY "SAVE"	28480	5041-3964
48	5041-3966	6	1	KEY "MODULE"	28480	5041-3966
49	5041-3965	5	1	KEY "RECALL"	28480	5041-3965
50	5041-3968	8	1	KEY "INT"	28480	5041-3968
51	5041-3969	9	1	KEY "EXT"	28480	5041-3969
52	5041-3951	9	1	KEY "HOLD"	28480	5041-3951
53	5041-3960	0	1	KEY "FREQUENCY"	28480	5041-3960
54	5041-3961	1	1	KEY "SPAN"	28480	5041-3961
55	5041-3962	2	1	KEY "AMPLITUDE"	28480	5041-3962
56	5041-3995	1	6	ACTUATOR SOFTKEY	28480	5041-3995
57	5041-3956	4	4	KEY-BLANK	28480	5041-3956
58	5041-3955	3	2	KEY "UP ARROW"	28480	5041-3955
59	5041-3955	3	1	KEY "DOWN ARROW"	28480	5041-3955
60	2190-0016	3	1	WASHER-LK INTL T 3/8 IN .377-IN-ID	28480	2190-0016
61	2950`0043	8	1	NUT-HEX-DBL-CHAM 3/8-32-THD .094-IN-THK	00000	BY DESCRIPTION
62 (Standard)	1250-2180	1	1	RF INPUT ASSEMBLY	28480	1250-2180
(Option 026)	08673-60040	9	1	ADAPTOR M 3.5 F 3.5	28480	08673-60040
(Option 026)	5021-9320	6	1	INPUT CONN MOUNTING FLANGE	28480	5021-9320
63	0515-1146	6	4	SCREW-MACH M3 X 0.5 8MM-LG PAN-HD	28480	0515-1146
64	5041-3938	2	1	RUBBER KEYPAD	28480	5041-3938
65	1990-1131	0	1	LED-LAMP LUM-INT=560UCD IF=20MA-MAX	2M627	LD-101MG
66	5041-1682	9	1	KEYCAP "LINE"	28480	5041-1682
67	0900`0010	2	1	O-RING .101-IN-ID .07-IN-XSECT-DIA NTRL	51633	AS568-005
68	0515-1552	2	1	SCREW-MACHINE ASSEMBLY M3 X 0.5 12MM-LG	U0421	M3.0X0.5X12
69	5021-5482	3	1	SUPPORT CENTER	28480	5021-5482
70	0515-1106	2	2	SCREW-MACH M4 X 0.7 16MM-LG PAN-HD	28480	0515-1106
71	0515-0894	3	9	SCREW-MACH M2.5 X 0.45 6MM-LG PAN-HD (P/O A1W1)	28480	0515-0894

Figure 4-5. Parts Identification, Front Frame (2 of 3)

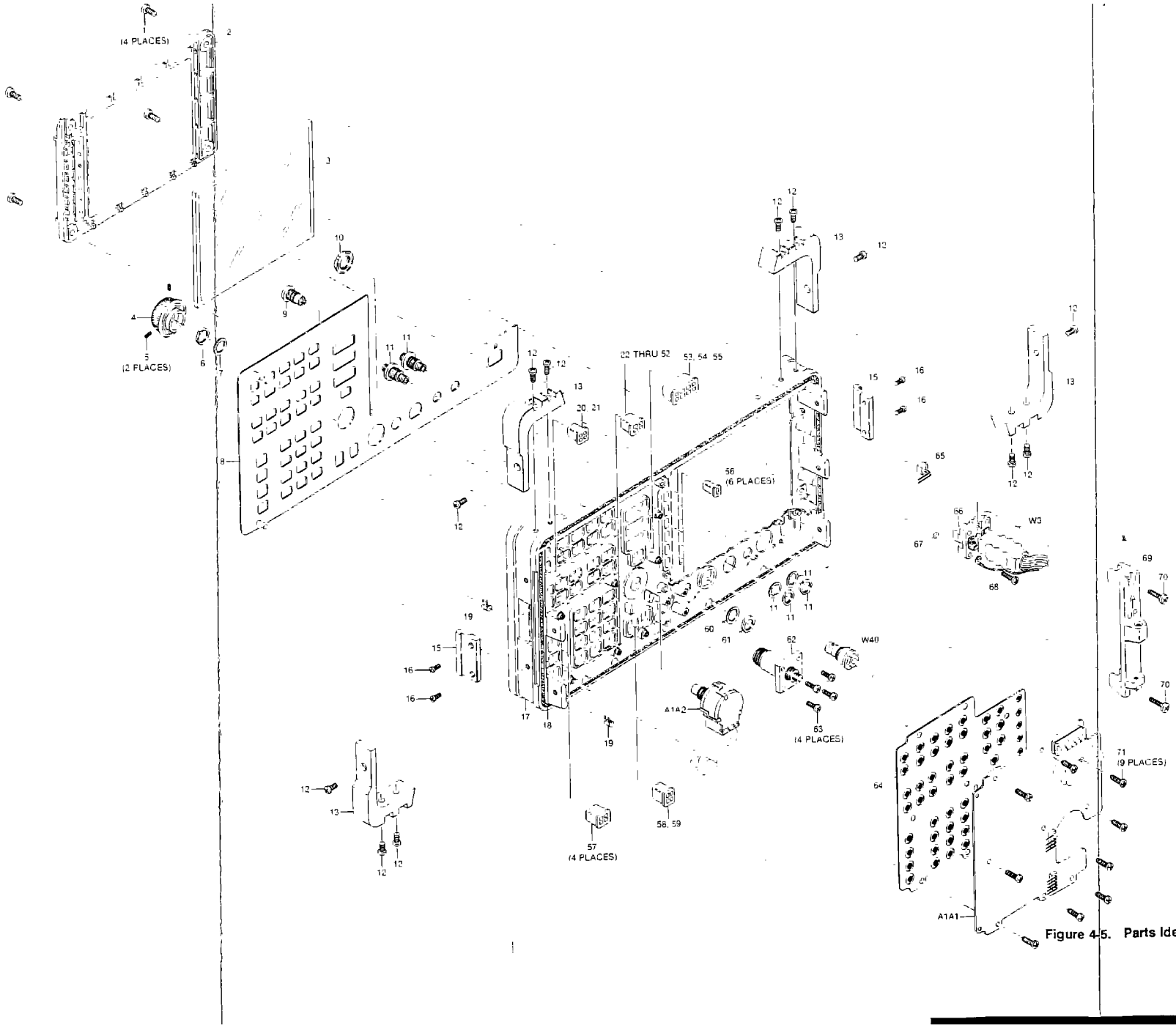

Figure 4-5. Parts Identification, Front Frame (3 of 3)

Item	HP Part Number	CD	Description	Qty	Mfr Code	Mfr Part Number
1	0515-0890	9	2	SCREWMACH M3 X 0.5 6MM-LG 90DEG-FLH-HD	28480	0515-0890
2 5062-7755	5062-0797	9	1	BATTERY HOLDER (Includes wires)	28480	5062-0797
3	0515-1669	2	4	SCREW-MACH M4 X 0 7 40MM-LG PAN-HD	28480	0515-1669
4	3160`0309	5	1	FAN GRILLE	28480	3160-0309
5	0380-0012	0	4	SPACER-RND .875-IN-ID	28480	0380-0012
6				NOT ASSIGNED		
7	6960-0002	4	1	PLUG-HOLE TR-HD FOR 0.5-D-HOLE STL	05093	SS-48152
8	6960-0023	9	2	PLUG-HOLE DOME-HD FOR 0.312-D-HOLE STL	04213	D-2730-LC2
9 (Option 001)	1250-1753	4	1	ADAPTOR-COAX STR F-SMA (Includes WASHER and NUT)	28480	1250-1753
10	0515-0890	9	4	SCREW-MACH M3 X 0.5 6MM-LG 90DEG-FLH-HD	28480	0515-0890
11	0515-0898	7	1	SCREW-MACH M3 X 0.5 6MM-LG PAN-HD	28480	0515-0898
12	0590-1251	6	5	NUT-SPCLY 15/32-32-THD .1-IN-THK .562-WD	00000	BY DESCRIPTION
13	1252-0995	8	1	CONNECTOR-TEL 2-CKT .141-SHK-DIA (Includes NUT, WASHER, and JACK)	28480	1252-0995
14	5001-8719	3	1	REAR PANEL-DRESS	28480	5001-8719
15	0515-1461	2	4	SCREW-MACH M3 X 0.5 6MM-LG PAN-HD	28480	0515-1461
16	8160-0520	7	1	RFI ROUND STRIP STL MSH/SIL RBR CU/SN	28480	8160-0520
17	5021-5479	8	1	REAR FRAME	28480	5021-5479
18	5021-6391	5	2	SCREW-CONN HPIB	28480	5021-6391
19	2200-0104	3	2	SCREW-MACH 4-40 .25-IN-LG 82 DEG	00000	BY DESCRIPTION
20	0515-1148	2	2	RETAINER-PUSH ON KB-TO-SHFT EXT	28480	0510-1148
21	0515-0898	7	1	SCREW-MACH M3 X 0.5 6MM-LG PAN-HD	28480	0515-0898
22	0535-0023	2	2	NUT-HEX DBL-CHAM M4 X 0.7 3.2MM-THK	00000	BY DESCRIPTION
B1	5061-9036	5	1	FAN ASSEMBLY (Includes wire)	28480	5061-9036
BT1 ~~1420-0341~~ 1420-0341	1420-0315	3	1	BATTERY 3.4V 1.7A-HR LITHIUM THIONYL	10183	TL-5104/S

Figure 4-6. Parts Identification, Rear Frame (1 of 2)

Service Manual

HP 8562A/B Spectrum Analyzer
(Includes Option 001, 003, 013, and 026)

HEWLETT PACKARD

HP Part No. 08562-90123 Microfiche Part No. 08562-90092
Printed in USA December 1990

©Copyright Hewlett-Packard Company 1990
All Rights Reserved. Reproduction, adaptation, or translation without prior written permission is prohibited, except as allowed under the copyright laws.
1212 Valley House Drive, Rohnert Park, CA 94928-4999, USA

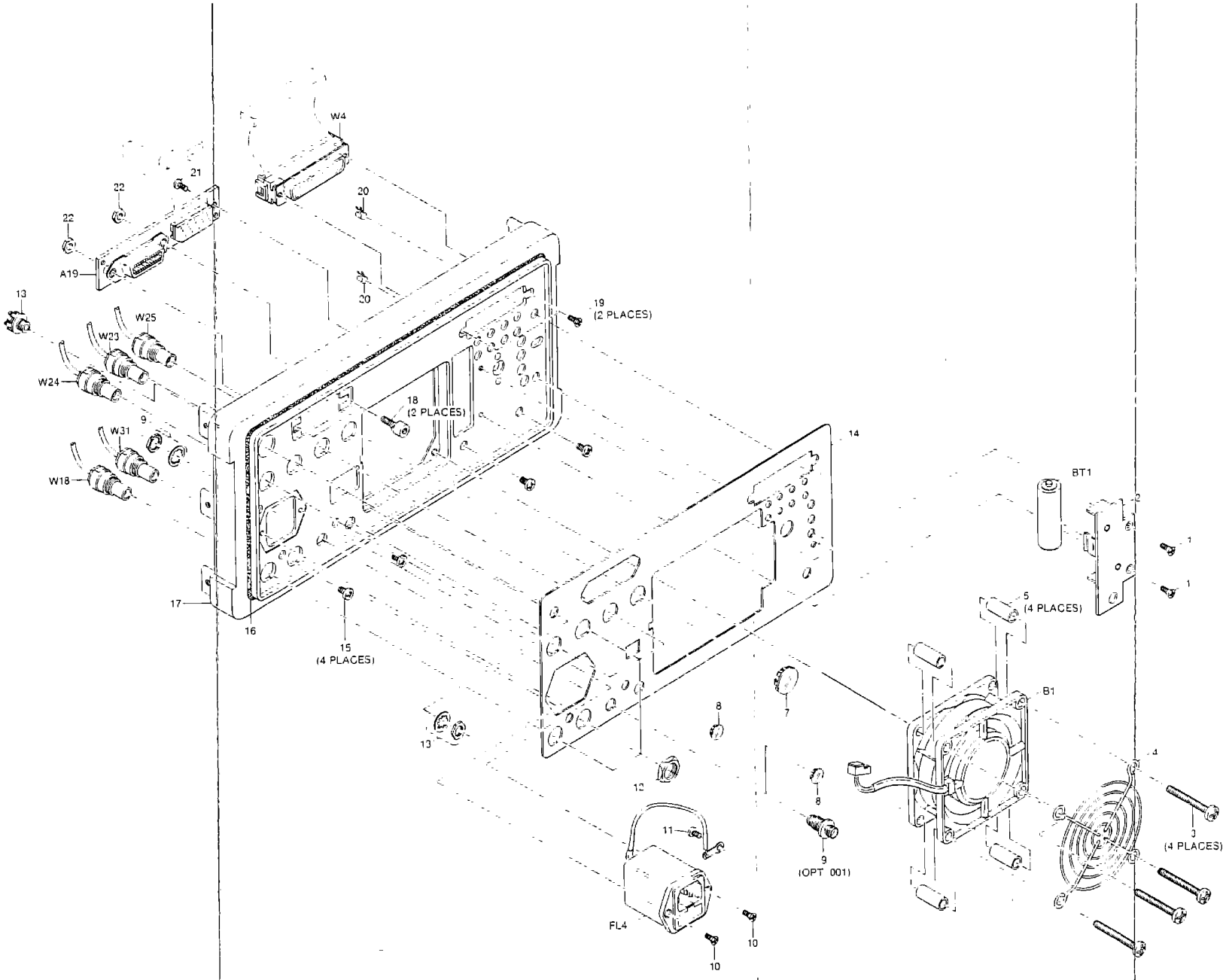

Figure 4-6. Parts Identification, Rear Frame (2 of 2)

5

Major Assembly and Cable Locations

Introduction

This chapter identifies the module's assemblies and cables and contains the following figures:

Figure	Page
5-1. Hinged Assemblies	5-4
5-2. Top View (A2 Unfolded)	5-4
5-3. Top View (A2 and A3 Unfolded)	5-5
5-4. Top View (A2, A3, A4, and A5 Unfolded)	5-6
5-5. Bottom View (A15 Unfolded)	5-7
5-6. Bottom View (A15 and A14 Unfolded)	5-8
5-7. Front End	5-9
5-8. Rear View	5-9

Use the list below to determine the figure(s) illustrating the desired assembly or cable.

Assemblies	Figure
A1 Front Frame	5-6
A1A1 Keyboard	5-6
A2 Controller	5-1, 5-2
A3 Interface	5-1, 5-2
A4 Log Amplifier	5-1, 5-3
A5 IF Filter	5-1, 5-4
A6 Power Supply	5-2, 5-4
A6A1 High Voltage Module	5-4
A7 LO Distribution Amplifier	5-7
A8 Dual Mixer	5-7
A9 RF Attenuator	5-7
A10 YTF	5-7
A11 YTO	5-7
A12 RF Switch	5-7
A13 Second Converter	5-7
A14 Frequency Control	5-1, 5-6
A15 RF	5-1, 5-5, 5-6
A16 Cal Oscillator	5-4
A17 CRT Driver	5-4
A18 CRT Assembly	5-4
A19 HP-IB	5-4
B1 Fan	5-8

Assemblies	Figure
BT1 Battery	5-8
FL1 Low Pass Filter	5-7
FL2 Low Pass Filter	5-7
FL3 Low Pass Filter	5-7
FL4 Line Filter	5-8
LS1 Speaker	5-4

Cables	Figure
A1A1W1	5-2, 5-4
A3W1	5-2
A19W1	5-2, 5-4
W1 Power Cable	5-2, 5-3, 5-5, 5-6, 5-4
W2 Control Cable	5-2, 5-3, 5-5, 5-6, 5-4
W3 Line Switch Cable	5-7
W4 Option Module Cable	5-4
W5 Audio Cable	5-4
W6 Battery Cable	5-4
W7 Display/Cal Osc Cable	5-2
W8 Display Power Cable	5-4
W9 CRT Yoke Cable	5-4
W10 YTO Drive Cable	5-6
W11 Attenuator Drive Cable	5-6
W12 A7 LODA Drive Cable	5-6, 5-7
W13 A13 Second Conv. Drive Cable	5-6, 5-7
W14 A12 RF Switch Cable	5-6
W15 A8 Dual Mixer Cable	5-6
W16 A10 YTF Drive Cable	5-6, 5-4
W17 10 MHz Ref 1 (Coax 84)	5-5, 5-4
W18 LO Sweep (Coax 97)	5-6
W19 Second IF Out (Coax 83)	5-5
W20 Zero-Span Video (Coax 6)	5-2
W21 Freq. Counter (Coax 1)	5-2, 5-3
W22 10 MHz Freq. Count (Coax 0)	5-2, 5-5
W23 Ext. Trigger In (Coax 93)	5-2
W24 Video Out (Coax 5)	5-2
W25 Blanking Out (Coax 4)	5-2
W26 Video (Coax 2)	5-2, 5-3
W27 Filter 10.7 MHz	5-3, 5-4
W28 AM/FM Demod (Coax 96)	5-3
W29 10.7 IF (Coax 7)	5-4, 5-5
W30 10.7 Cal Sig. (Coax 9)	5-4
W31 Ref. In/Out (Coax 8)	5-5
W32 Sampler IF (Coax 87)	5-5, 5-6
W33 Second LO Drive (Coax 81)	5-5, 5-7
W34 First LO Samp. (Coax 0)	5-5, 5-6, 5-7
W35 Int Second IF (Coax 92)	5-5, 5-7
W36 Ext Second IF (Coax 86)	5-5
W37 10 MHz Ref 1 (Coax 85)	5-5, 5-6

Cables	Figure
W38 First LO	5-7
W39 First Mixer LO	5-7
W40 Cal. Out (Coax 89)	5-5
W41 RF Input	5-7
W42 First LO Out	5-7
W43 Semirigid	5-7
W44 Semirigid	5-7
W45 Semirigid	5-7
W46 Semirigid	5-7
W47 SMA Adapter	5-7

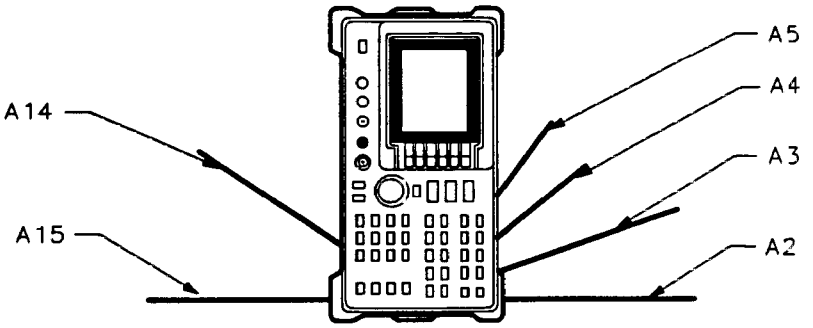

Figure 5-1. Hinged Assemblies

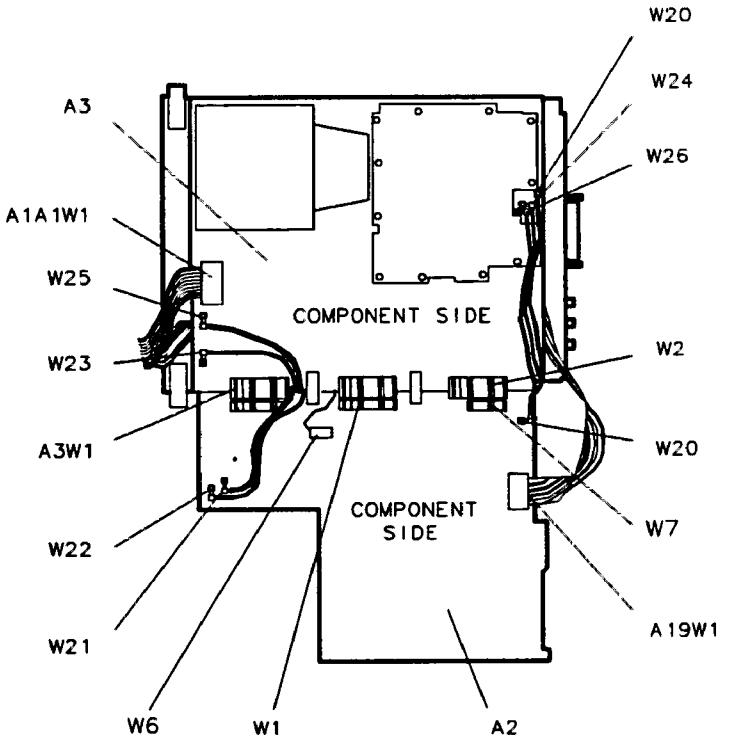

Figure 5-2. Top View (A2 Unfolded)

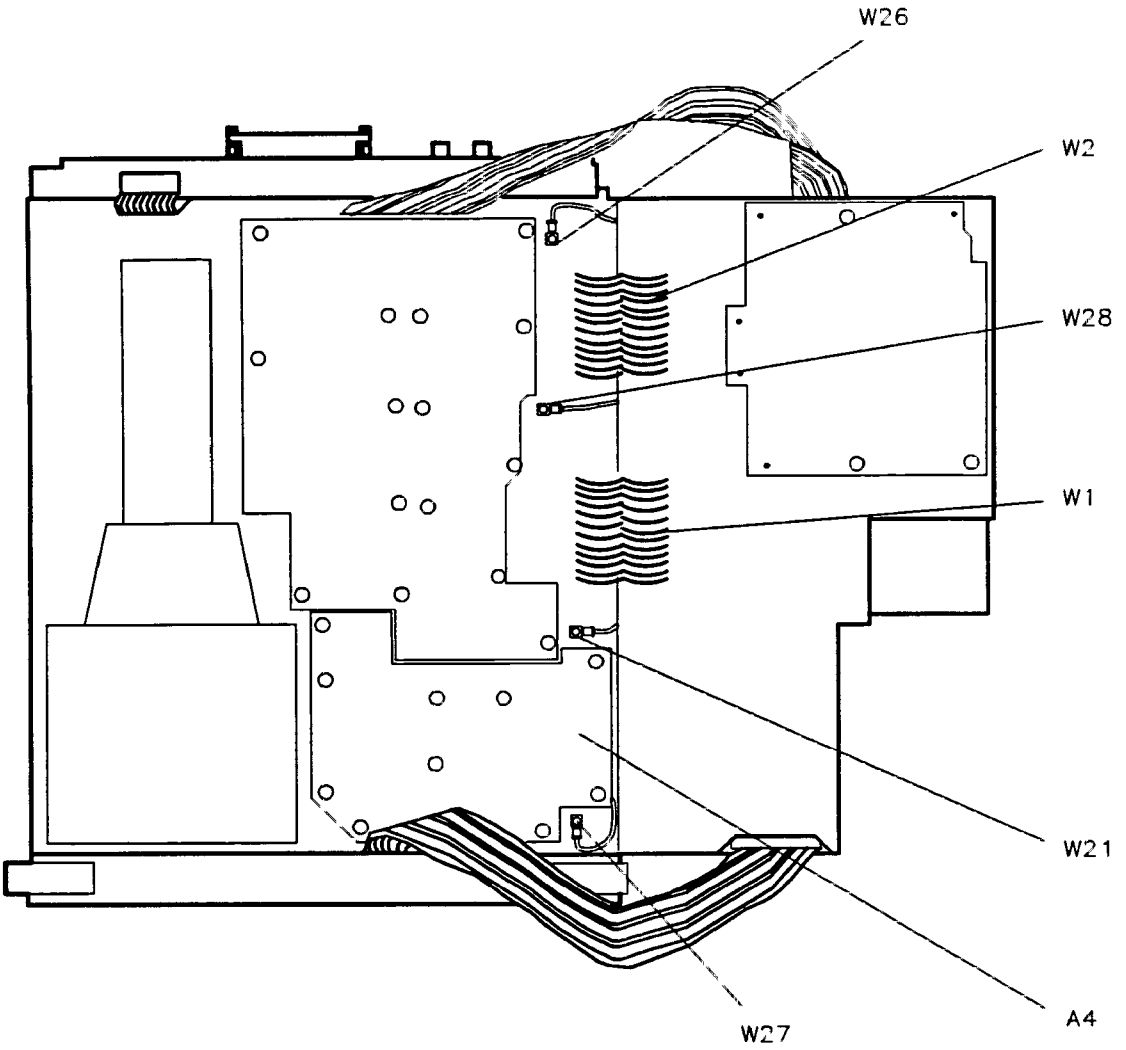

Figure 5-3. Top View (A2 and A3 Unfolded)

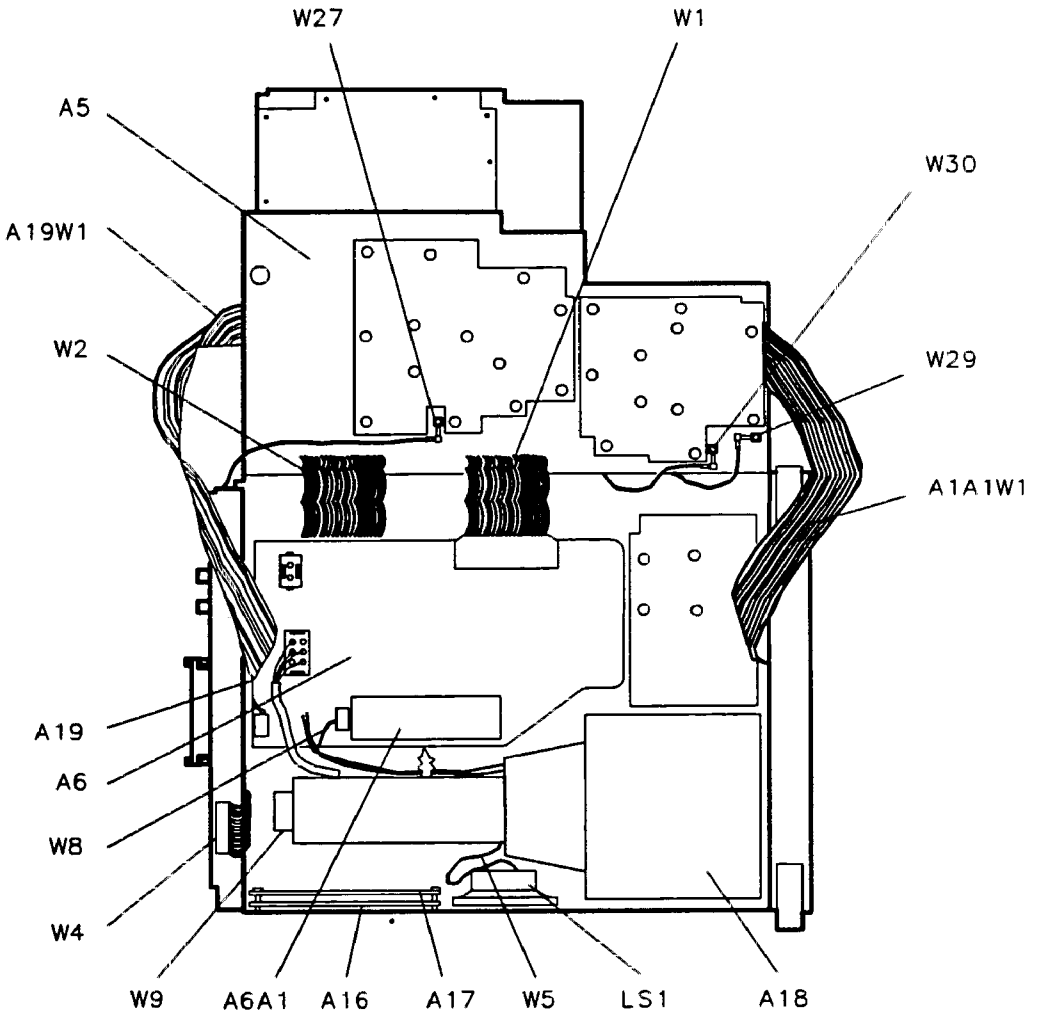

Figure 5-4. Top View (A2, A3, A4, and A5 Unfolded)

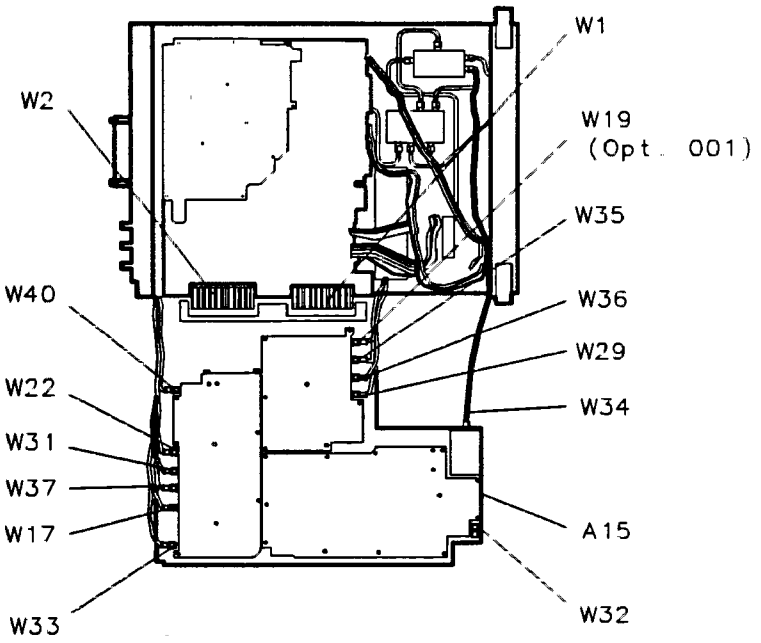

Figure 5-5. Bottom View (A15 Unfolded)

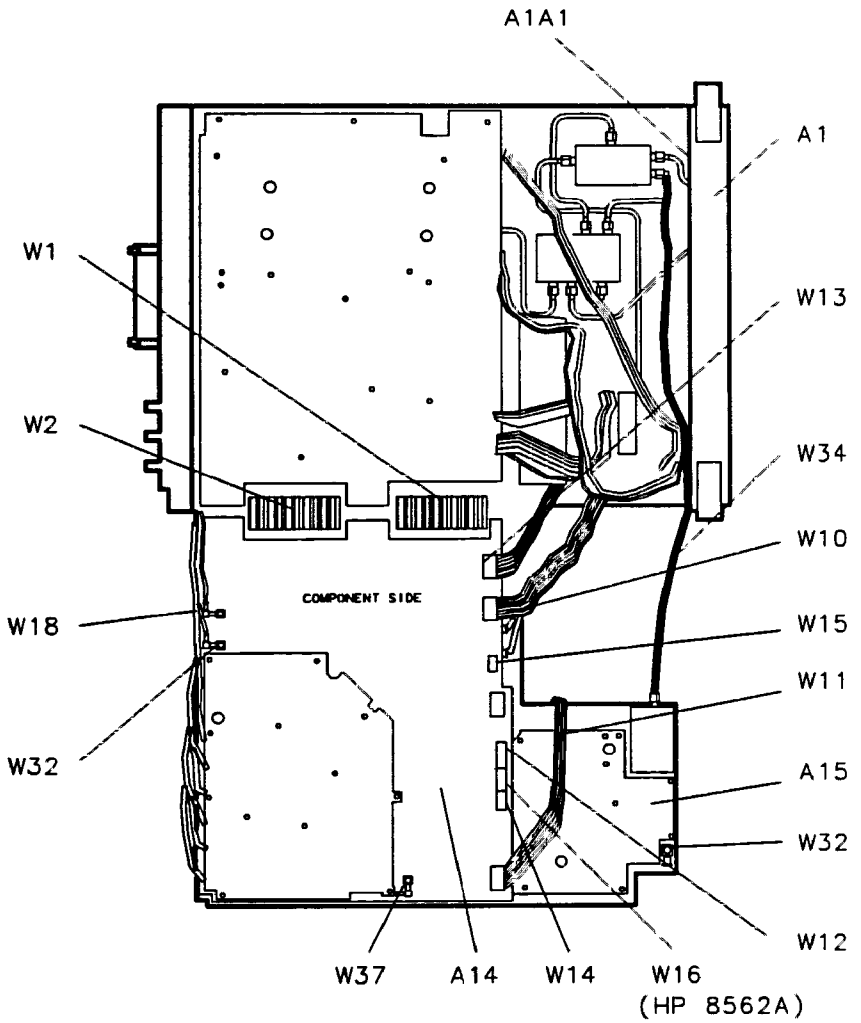

Figure 5-6. Bottom View (A15 and A14 Unfolded)

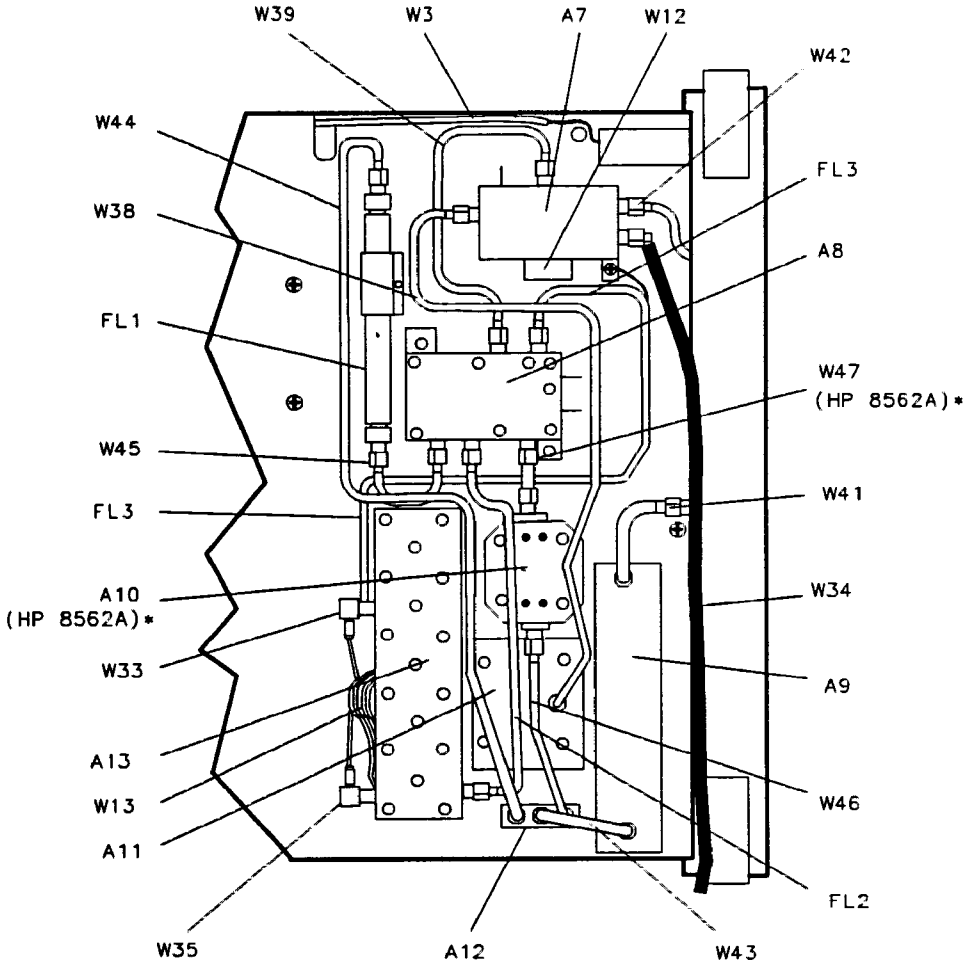

Figure 5-7. Front End

62A

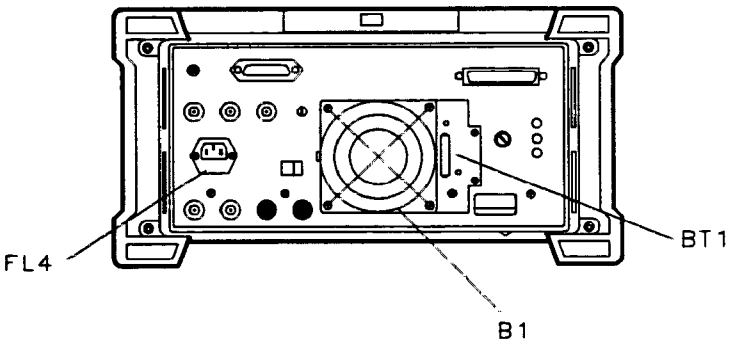

Figure 5-8. Rear View

6

Manual Backdating

This chapter contains information for adapting this manual to earlier HP 8562A/B Spectrum Analyzers. If your service manual was shipped to you with your instrument, the manual you received should apply to your instrument. If, however, you ordered your manual after you received your instrument, then you may need to use this chapter to backdate your manual to document your instrument's serial prefix.

How to Use This Backdating Information

Instructions for changing the manual are grouped in "Manual Change" paragraphs. Find the serial number prefix for the instrument in Table 6-1, and perform the listed "Manual Change" paragraphs in numerical order.

Refer to Table 6-2 for a listing of affected HP 8562A and HP 8562B assemblies. Refer to Table 4-1 for firmware part numbers and date codes.

Table 6-1. Serial Prefix vs. Change Paragraphs

Serial Prefix	HP 8562A Manual Change	HP 8562B Manual Change
2642A and below	1-21	1-21
2703A and below	1-20	1-20
2712A and below	1-19	1-19
2724A and below	1-18	1-18
2733A and below	1-17	1-17
2741A and below	1-16	1-16
2745A and below	1-15	1-15
2750A and below	1-13	1-14
2809A and below	1-12	1-12
2840A and below	1-11	1-11
2851A and below	1-10	1-10
2909A and below	1-9	1-9
2912A and below	1-8	1-8
2913A and below	1-7	1-7
2923A and below	1-6	1-6
2927A and below	1-5	1-4
2929A and below	1-4	1-5
2950A and below	1-4	1-4
3006A and below	1-3	1-3
3017A and below	1,2	1,2
3029A and below	1	1

Table 6-2. Affected HP 8562A/B Assemblies

Serial Prefix	Affected Assemblies																		
	A1A1	A2	A3	A4	A5	A6	A7	A8	A9	A10	A11	A12	A13	A14	A15	A16	A17	A18	A19
2703A															√				
2712A					√									√					
2724A																√			
2733A		√													√				
2741A															√				
2745A			√		√														
2750A															√				
2805A														√[1]					
2809A														√[2]					
2909A			√			√													
2912A						√													
2913A															√				
2923A		√		√															
2927A					√									√[1]					
2929A														√[2]					
2950A					√														
3006A														√					
3017A															√				
3029A															√				

1 HP 8562A only.

2 HP 8562B only.

Manual Change Number	Description of Change
1	Change A3[1] from 08562-60138 to 08562-60097.
2	Change A15[1] From: To: (Std) 08562-60118 ..... 08562-60122 (Opt 001) 08562-60118 ..... 08562-60126 (Opt 003) 08562-60117 ..... 08562-60121 (Opt 013) 08562-60117 08562-60125
3	Change A15[1] From: To: (Std) 08562-60122 ..... 08562-60103 (Opt 001) 08562-60126 ..... 08562-60104 (Opt 003) 08562-60121 ..... 08562-60101 (Opt 013) 08562-60125 08562-60102
4	Change A14[1] from 08562-60123 to 08562-60055.
5	Change A5[1] from 08562-60120 to 08562-60082.
6	Change A5[1] from 08562-60082 to 08562-60070. Change A14[1] from 08562-60055 to 08562-60074.
7	Change A2[1] from 08562-60110 to 08562-60051. Change A4[1] from 08562-60109 to 08562-60034.
8	Delete References to Option 003. Delete A15[1] board number 08562-60101 and 08562-60102 options 003 and 013 RF boards. Change A15[1] From: To: (Std) 08562-60103 ..... 08562-60059 (Opt 001) 08562-60104 08562-60060
9	Change A6[1] from 08562-60094 to 08562-60058.
10	Chapter 4, Table 4-4: Change all occurrences of screw 0515-0951 for assembly shields to 1390-0744, CD=7, SCREW CPTM2.5 16L.
11	Chapter 4, Figure 4-5: Change item 62, HP part number 08673-60040 to HP part number 1250-1976, CD=3. Change item 62, HP part number 5021-9320 to HP part number 5021-6746, CD=4. Delete all occurrences of O-ring 0905-0375 for assembly shields.
12	Change A3[1] from 08562-60097 to 08562-60052.

1 See Tables A-1 and A-2.

Manual Change Number	Description of Change
13	Change A6[1] from 08562-60058 to 08562-60036. Change A16[1] from 08562-60065 to 08562-60054.
14	Change A14[1] from 08562-60074 to 08562-60068.
15	Change A14[1] from 08562-60068 to 08562-60050.
16	Change A3[1] from 08562-60052 to 08562-60033. Change A5[1] from 08562-60070 to 08562-60049.
17	Change A15[1] from 08562-60059 to 08562-60048.
18	Change A15[1] (Opt 001) from 08562-60060 to 08562-60044. Change A2[1] from 08562-60051 to 08562-60032.
19	Change A16[1] from 08562-60054 to 08562-60041.
20	Change A14[1] from 08562-60050 to 08562-60037. Change A5[1] from 08562-60049 to 08562-60035.
21	Change A15[1] (Std) from 08562-60048 to 08562-60038.

1 See Tables A-1 and A-2.

7

General Troubleshooting

Introduction

This chapter provides information needed to troubleshoot the instrument to one of the six major functional sections. Chapters 8 through 13 cover troubleshooting for each of these sections. Before troubleshooting, read the rest of this introduction. To begin troubleshooting, refer to "Troubleshooting to a Functional Section."

Topic	Page
Troubleshooting to a Functional Section	7-6
Using the TAM	7-8
Error Messages	7-13
Block Diagram Description	7-30

Note

When a part or assembly is replaced, adjustment of the affected circuitry is usually required. Refer to Chapter 2, "Adjustment Procedures."

Warning

Troubleshooting and repair of this instrument without the cover exposes high voltage points that may, if contacted, cause personal injury. Maintenance and repair of this instrument should, therefore, be performed only by a skilled person who knows the hazards involved. Where maintenance can be performed without power applied, the power should be removed. When any repair is completed, be sure that all safety features are intact and functioning and that all necessary parts are connected to their grounds.

Assembly Level Text

To locate troubleshooting information for an individual assembly, refer to Table 7-1.

Block Diagrams

Instrument-level block diagrams are located at the end of this chapter. Power levels and voltages shown on block diagrams are provided as a troubleshooting aid only. They should not be used for making instrument adjustments. Symbols used in the block and schematic diagrams are defined in Chapter 14.

Assembly Test Points

The analyzer's board assemblies contain four types of test points: post, pad, extended component lead, and test jack. Figure 7-1 illustrates each type of test point as seen on both block diagrams and circuit boards. The name of the test point will be etched into the circuit board next to the test point (e.g. TP2). In some instances, the test point will be identified on the board by its number only.

Pad

Each pad test point uses a square pad and a round pad etched into the board assembly. The square pad is the point being measured. The round pad supplies a grounding point for the test probe.

Test Jack

The test jack is a collection of test points located on a 16-pin jack. There are over 26 test jacks used throughout the analyzer. The HP 85629 Test and Adjustment Module uses the analyzer's test jacks during diagnostic and adjustment procedures. The pins on the test jack may be manually probed, provided caution is used to prevent accidental shorting between adjacent pins.

Figure 7-1 illustrates the pin configuration for the test jack. Line names are the same for all test jacks. The following mnemonics are used: MS "measured signal," TA "test and adjustment Module address line," and OS "output signal." Test jack test points are identified on block diagrams by both the jack/pin number and line name.

Ribbon Cables

Ribbon cables are used extensively in the analyzer. The following five cables use different pin numbering methods on the jacks (signal names remain the same but the pin numbers vary):

W1, Power Cable: Refer to Chapter 13 for cable connections.
W2, Control Cable: Refer to Chapter 8 for cable connections.
W4, Option Cable
A3W1, Interface Cable
A19W1, HPIB Cable

Figure 7-2 illustrates the pin configurations of these five cables. Cables W1 and W2 use two pin numbering methods on their many jacks. These methods are identified in the interconnect and block diagrams by the letters "A" and "B" next to the jack designator (e.g. J1(A)). Board assembly jacks connected to W1 will always be labeled J1. Board assembly jacks connected to W2 will always be labeled J2.

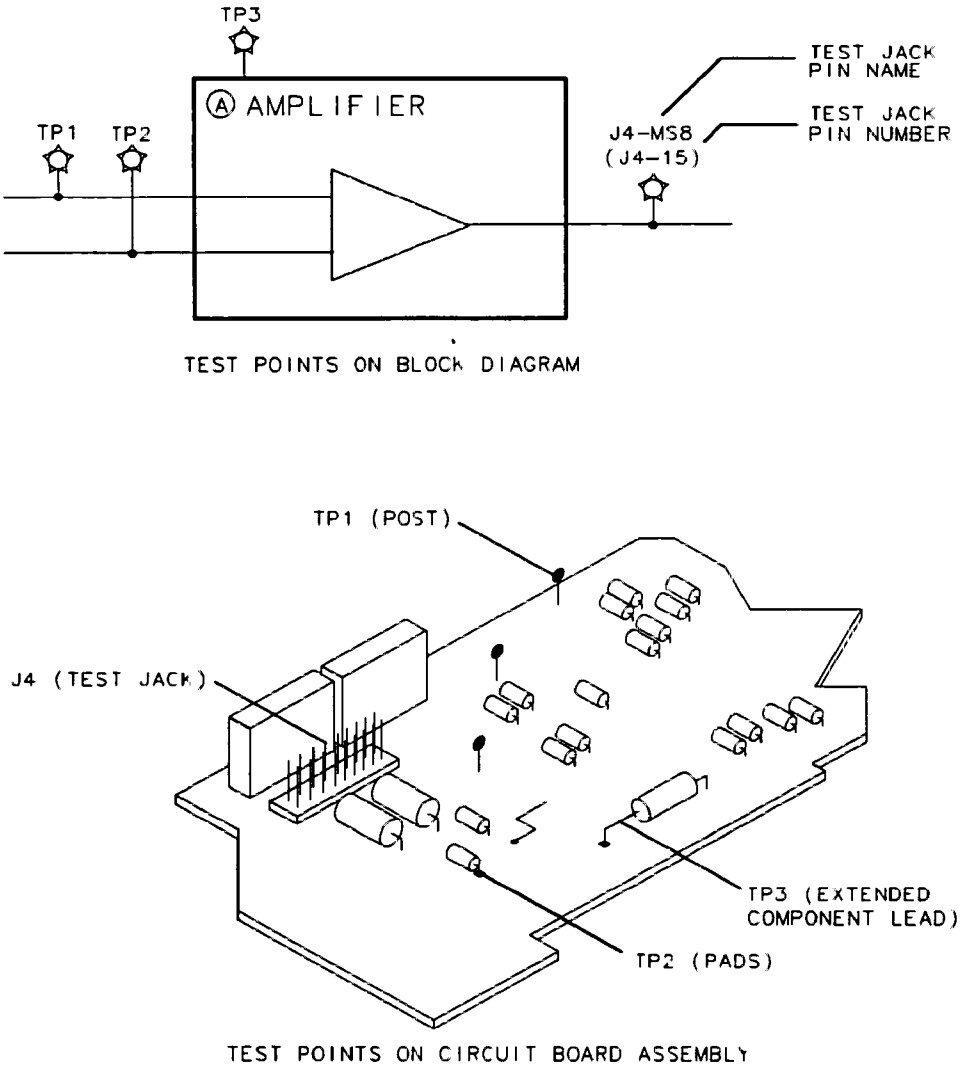

Figure 7-1. Assembly Test Points

W1

POWER CABLE CONNECTIONS

A				B			
-15	50	49	-15V	-15V	1	2	-15V
+15V	48	47	+15V	+15V	3	4	+15V
LINE TRIG	46	45	+28V	LINE TRIG	5	6	+28V
+5V	44	43	+5V	+5V	7	8	+5V
+5V	42	41	+5V	+5V	9	10	+5V
+5V	40	39	+5V	+5V	11	12	+5V
D GND	38	37	D GND	D GND	13	14	D GND
D GND	36	35	D GND	D GND	15	16	D GND
A GND	34	33	A GND	A GND	17	18	A GND
D GND	32	31	D GND	D GND	19	20	D GND
+5V	30	29	+5V	+5V	21	22	+5V
+5V	28	27	+5V	+5V	23	24	+5V
+15V	26	25	+15V	+15V	25	26	+15V
-15V	24	23	-15V	-15V	27	28	-15V
PWR UP	22	21	+28V	PWR UP	29	30	+28V
+28V	20	19	+15V	+28V	31	32	+15V
A GND	18	17	+15V	A GND	33	34	+15V
-15V	16	15	A GND	-15V	35	36	A GND
-15V	14	13	-12.6V (PROBE POWER)	-15V	37	38	-12.6V (PROBE POWER)
A GND	12	11	NC	A GND	39	40	NC
*SCAN RAMP	10	9	A GND	*SCAN RAMP	41	42	A GND
NC	8	7	NC	NC	43	44	NC
A GND	6	5	NC	A GND	45	46	NC
NC	4	3	A GND	NC	47	48	A GND
NC	2	1	NC	NC	49	50	NC

POWER FOR CONTROLLER AND INTERFACE ONLY

*NOTE Scan Ramp for the Controller or Interface boards only.

W2

CONTROL CABLE CONNECTIONS

A				B			
R/T DAC 1	50	49	R/T DAC 2	R/T DAC 1	1	2	R/T DAC 2
NC	48	47	A GND	NC	3	4	A GND
VIDEO TRIG	46	45	SCAN RAMP	VIDEO TRIG	5	6	SCAN RAMP
A GND	44	43	+10V REF	A GND	7	8	+10V REF
YTO ERROR	42	41	A GND	YTO ERROR	9	10	A GND
FC ERROR	40	39	LFC ENABLE	FC ERROR	11	12	LFC ENABLE
A GND	38	37	LO 3 ERR	A GND	13	14	LO 3 ERR
RF GAIN	36	35	A GND	RF GAIN	15	16	A GND
R/T DAC 3	34	33	OFL ERR	R/T DAC 3	17	18	OFL ERR
RESERVED	32	31	D GND	RESERVED	19	20	D GND
HSCAN	30	29	R/T PULSE	HSCAN	21	22	R/T PULSE
D GND	28	27	NC	D GND	23	24	NC
LLOG_VIDSTB	26	25	NC	LLOG_VIDSTB	25	26	NC
LIFSTB	24	23	LFCSTB	LIFSTB	27	28	LFCSTB
LAFSTB	22	21	D GND	LAFSTB	29	30	D GND
A7	20	19	A6	A7	31	32	A6
A5	18	17	D GND	A5	33	34	D GND
A4	16	15	A3	A4	35	36	A3
A2	14	13	A1	A2	37	38	A1
D GND	12	11	A0	D GND	39	40	A0
D7	10	9	D6	D7	41	42	D6
D5	8	7	D GND	D5	43	44	D GND
D4	6	5	D3	D4	45	46	D3
D2	4	3	D1	D2	47	48	D1
D GND	2	1	D0	D GND	49	50	D0

Figure 7-2. Ribbon Cable Connections (1 of 2)

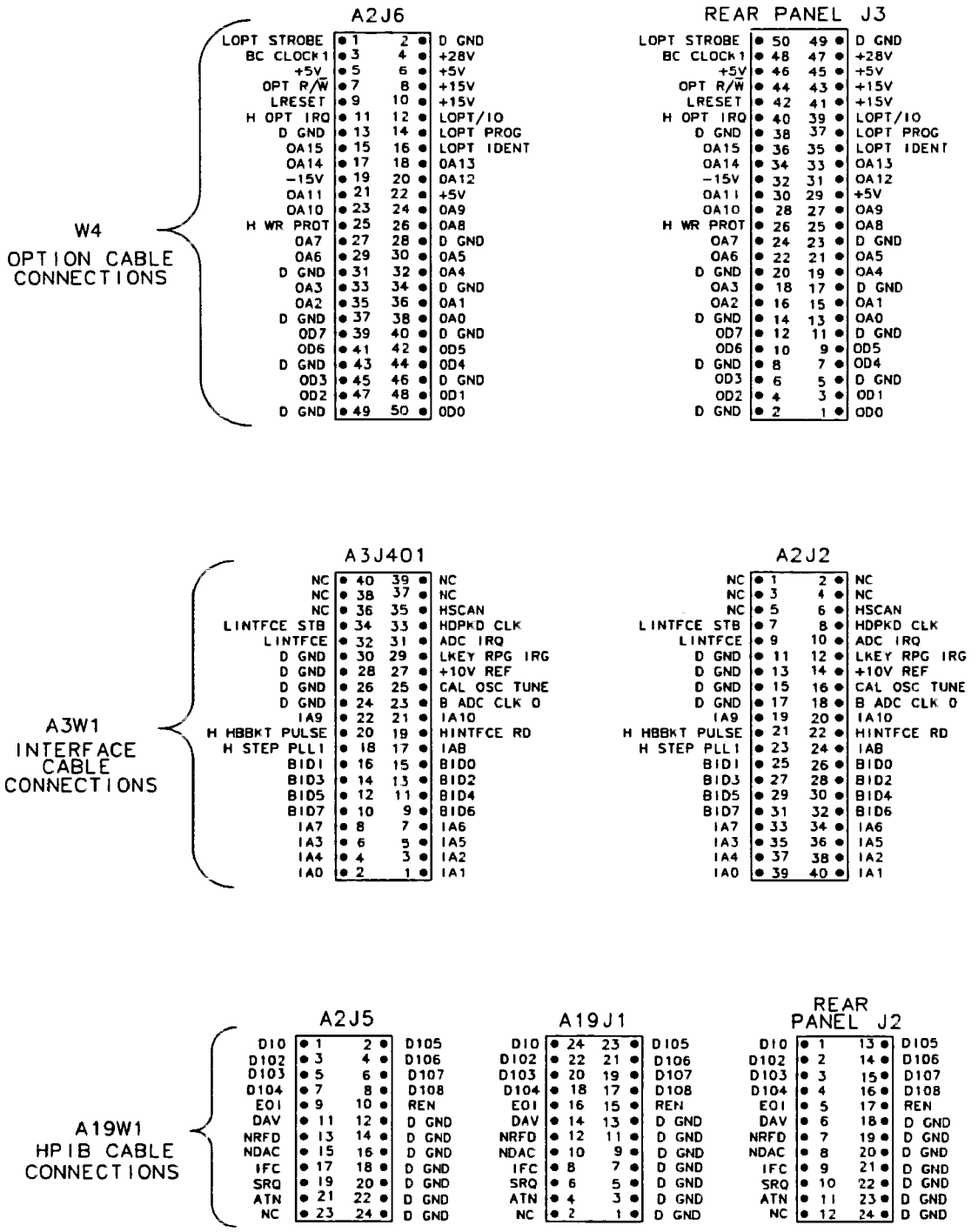

Figure 7-2. Ribbon Cable Connections (2 of 2)

Troubleshooting to a Functional Section

1. Refer to Table 7-1 for the location of troubleshooting information.
2. If the HP 85629 Tests and Adjustments Module (TAM) is available, refer to "Using the TAM" in this chapter.
3. If error messages are displayed, refer to "Error Messages" in this chapter. You will find both error descriptions and troubleshooting information.
4. If signals cannot be seen in either low or high band, and no errors messages are displayed, the fault is probably in the RF Section. Refer to Chapter 12, "RF Section."
5. Blank displays result from problems caused by either the Controller or Display/Power-Supply Sections. (Refer to Chapter 10 and Chapter 13.) Because error messages (700 to 755) caused by the Controller Section cannot be seen on a blank display, use the following BASIC program to read these errors over HP-IB. If the program returns an error code of 0, there are no errors.

```
10 DIM Err$[128]
20 OUTPUT 718;"ERR?;"
30 ENTER 718; Err$
40 PRINT Err$
50 END
```

   a. If there is no response over HP-IB, set an oscilloscope to the following settings:
      Sweep Time ..... 2 ms/div
      Amplitude Scale ..... 1 V/div
   b. The signals at A2J202 pin 3 and pin 14 should measure about 4 Vp-p. If the levels are incorrect, refer to Chapter 10 and troubleshoot the A2 Controller Assembly.
   c. Set the oscilloscope to the following settings:
      Sweep Time ..... 1 ms/div
      Amplitude Scale ..... 2 V/div
   d. The signal at A2J202 pin 15 should consist of TTL pulses. If the signal is at a constant level (high or low), troubleshoot the A2 Controller Assembly.
6. Display problems such as intensity or distortion are caused by either the Controller or Display/Power-Supply Sections. (Refer to Chapter 10 and Chapter 13.)

Table 7-1. Location of Assembly Troubleshooting Text

Instrument Assembly	Location of Troubleshooting Text
A1A1 Keyboard	Chapter 8. ACD/Interface Section
A1A2 RPG	Chapter 8. ACD/Interface Section
A2 Controller	Chapter 10. Controller Section
A3 Interface	Chapter 8. ADC/Interface Section Chapter 9. IF Section
A4 Log Amplifier	Chapter 9. IF Section
A5 IF	Chapter 9. IF Section
A6 Power Supply	Chapter 13. Display/Power Supply Section
A6A1 HV Module	Chapter 13. Display/Power Supply Section
A7 1ST LO Dist. Ampl.	Chapter 13. Synthesizer Section
A8 Dual Band Mixer	Chapter 12. RF Section
A9 Input Attenuator	Chapter 12. RF Section
A10 YTF	Chapter 12. RF Section
A11 YTO	Chapter 13. Synthesizer Section
A12 RF Switch	Chapter 12. RF Section
A13 2nd Converter	Chapter 12. RF Section
A14 Frequency Control	Chapter 11. Synthesizer Section Chapter 12. RF Section
A15 RF Assembly	Chapter 11. Synthesizer Section Chapter 12. RF Section
A16 Cal Oscillator	Chapter 9. IF Section
A17 CRT Driver	Chapter 13. Display/Power Supply Section
A18 CRT	Chapter 13. Display/Power Supply Section
A19 HP-IB	Chapter 13. Controller Section
FL1,2,3	Chapter 12. RF Section

Using the TAM

When attached to the spectrum analyzer's rear panel, the HP 85629 Test and Adjustment Module (TAM) provides diagnostic functions for supporting the HP 8562A/B. Because the TAM connects directly to the analyzer's internal data and address bus, it controls the analyzer's hardware directly through firmware control. It would be impossible to control the hardware to the same extent either from the analyzer's front panel or over the HP-IB.

- The HP 85629A supports HP 8562A/B Spectrum Analyzers serial prefixed 2809A and below.
- The HP 85629B supports all versions of HP 8562A/B Spectrum Analyzers.

The TAM measures voltages at key points in the circuitry and flags a failure whenever the voltage falls outside the limits. The TAM locates the failure to a small functional area which can be examined manually. Remember the following when using the TAM:

- Be sure the spectrum analyzer's power is turned off when installing or removing the TAM.
- Use the **HELP** softkey (found in all menus) for useful information.
- Pressing (MODULE) will return you to the TAM's main menu.
- The TAM acts as the active controller on the HP-IB bus. No other active controller should be connected to the bus.

Diagnostic Functions

The TAM provides the four diagnostic functions listed below. (Additional menu selections support the TAM itself.) Refer to the indicated page for a description of each function.

Diagnostic	Page
1. Automatic Fault Isolation	7-10
2. Manual Probe Troubleshooting *(requires cover removal)*	7-11
3. RF Path Fault Isolation	7-12
4. Cal Oscillator Troubleshooting *(requires cover removal)*	7-12

TAM Requirements

For the TAM to function properly, certain parts of the analyzer must be operating properly. These include the CPU, parts of the Program ROM and Program RAM, the keyboard and keyboard interface, and the display.

Even though the TAM communicates to the operator via the display, some display problems can be troubleshot using the TAM. This is possible by using the **Print Page** softkey. Even if the display is dead, **Print Page** is still active. Refer to Chapter 13 for instructions on using the TAM when the display is not functioning.

Test Connectors

The TAM uses a built-in dc voltmeter and DAC to measure voltages on any one of 26 "test connectors" located throughout the HP 8562A/B.

Note

HP 85629A Test and Adjustment modules with firmware revisions A or B cannot make valid measurements on test connector A5J8.

Revision Connectors

One test connector on each assembly is reserved as a "revision connector." The TAM uses the revision connector to identify the assembly's design revision. A "revision voltage" (placed onto one MSL pin) indicates design changes.

The TAM must be plugged into the revision connector first to determine which tests to use for the assembly. If the revision connector has not been probed, a message will appear instructing you to connect the probe to the revision connector and press **TEST**. You can then probe the rest of the assembly's connectors.

Note

If the revision of the PC board is newer than the TAM, a message will be displayed stating that the revision code for this board is not known by this module. The choices presented are to use the test for the latest known revision board, measure only voltages, or exit. In general, most points will not change from one board revision to another, so using the most current tests is still very useful. However, any failure should be verified using the manual troubleshooting procedures before doing a repair.

Inconsistent Results

Many of the signals measured by the TAM are digitally controlled. If inconsistent results are obtained, or if failures appear in unrelated areas, the digital control may be at fault. Refer to the manual troubleshooting procedures for those assemblies to isolate those failures.

Erroneous Results

If the TAM seems to be giving erroneous results, its performance can be checked by placing the probe on the TAM test connector (A2J11) located on the A2 Controller Assembly and executing the manual probe diagnostics. If either of the tests fail, the TAM is malfunctioning and should be serviced.

Blank Display

It is possible to use the TAM's Manual Probe Troubleshooting without a display if an HP-IB printer is available. Refer to "Display/Power-Supply Section" for more information.

Automatic Fault Isolation

Automatic Fault Isolation (AFI) is designed to isolate most faults to one or two assemblies. AFI can be run with the analyzer's cover in place and requires only the CAL OUTPUT signal as a stimulus. The entire procedure takes less than two minutes to complete if no failures are found.

AFI performs checks of five functional areas in a pre-defined sequence. The sequence minimizes the chance of making a false assumptions. The TAM checks the analyzer "from the inside out." For example, the ADC is checked before the IF is checked. This ensures that if no signal is detected through the IF, the fault is in the IF Section and not a faulty ADC. (The ADC measures the video signal from the IF Section.)

The sequence of checks is as follows:

1. Controller Check
2. ADC/Interface Check
3. IF/LOG Check
4. LO Control Check
5. RF Low Band Check

Note

Only the low band of the HP 8562A/B is checked by AFI. This is because the only stimulus to the RF Section comes from the 300 MHz CAL OUTPUT signal. A signal greater than 2.9 GHz would be required to check the high band path.

Display/Power Supply

AFI cannot check the Display/Power-Supply Section because this section powers the TAM and provides the display of AFI results.

Controller Check

The TAM performs a check-sum of all ROMs, RAMs, and the EEROM. The CPU is also checked, since parts of the CPU could be non-functional while the TAM still operates. These checks are very similar to those done by the analyzer at power-on.

ADC/Interface Check

The keyboard interface and strobe-select circuitry must be functioning correctly, since these are required to operate the TAM. The TAM checks the ADC by attempting to measure three

signals from three different locations. This ensures that an open or short in one cable will not hide the fact that the ADC is operating satisfactorily.

The analog bus (W2 Control Cable) is checked by sending data out on the data lines and reading the data back. If this check fails, disconnect one board at a time and rerun AFI to determine if an assembly causes the problem. If the fault remains when all assemblies disconnected from W2, troubleshoot W2 or the A3 Interface Assembly.

IF/LOG Check

The TAM uses the A16 Cal Oscillator Assembly as the stimulus for checking the IF Section. (The TAM confirms if the signal from A16 passes through an IF path of least resistance.) If the signal is undetected, the TAM repeats the test with a signal originating from the RF Section. Presence of this signal through the IF indicates a faulty A16 assembly.

LO Control Check

The LO Control Check verifies test that all phase-lock loops (PLLs) in the Synthesizer Section lock. (Some oscillators are checked to ensure that they will lock outside their normal operating frequency range.) The TAM also performs an operational check on several DACs in the Synthesizer Section.

RF Low Band Check

Because the check uses the 300 MHz CAL OUTPUT signal as a stimulus, the TAM checks only the RF Section's low-band path. The TAM tests the operation of A8 Dual Mixer, A9 Input Attenuator, Second IF Distribution, A12 RF Switch, and most of the A13 Second converter.

A12 RF Switch operation is checked by comparing the signal level between the low- and high-band switch positions. The analyzer is placed in external mixing to test the Second IF Distribution switch. If the signal variance between the measurements is insignificant, suspect faulty switching or isolation.

AFI also checks the Flatness Compensation Amplifiers (part of the A15 RF Assembly), ensuring that their gain can be adjusted over a certain range.

If no signal is detected through the RF Section, AFI will substitute the 298 MHz SIG ID oscillator for the 3rd LO while simultaneously decreasing the 1st LO frequency by 2 MHz. If a signal can now be detected, troubleshoot the 3rd LO Driver Amplifier on the A15 RF Assembly.

Manual Probe Troubleshooting

Manual Probe Troubleshooting probes the instrument's test connectors to perform the following types of measurements:

- amplifier and oscillator dc current draw by monitoring the voltage across a resistor of known value.
- oscillator tune voltages ensuring proper operation of phase/frequency detectors and loop integrators.
- static bias voltages.

Note HP 85629A Test and Adjustment modules with firmware revision A or B cannot make valid measurements on test connector A5J8.

If probing a connector for a check yields a "FAIL" indication, select the desired check using either the knob or step keys and press **More Info**. A description of the function checked (with measured and expected voltages/currents) is displayed with a list of additional areas to check. These areas can sometimes be checked by looking at another TAM connector, but usually require manual troubleshooting techniques to isolate the problem further.If an HP-IB printer is connected, press **Print Page** to provide a hard copy of the currently displayed screen (the softkey labels will not be printed).

Each test connector has fifteen pins (one pin is missing to act as a key). The pins contain eight measured signal lines (measured signal lines denoted as MS1 through MS8), one input signal line (OS1), one ground, and five pins encoding a five-bit connector address.

The TAM needs to probe each assembly's Revision Connector once; subsequent readings are not necessary. It is possible, for example, to probe the A5 IF Assembly, then the A4 Log Amplifier Assembly, and then return to A5 without having to re-probe A5's Revision Connector. However, the Revision Connector must be re-probed if the spectrum analyzer is returned to normal operation and then back to TAM control. (This is also true if the analyzer is turned off.)

RF Path Fault Isolation

RF Path Fault Isolation checks high-band RF paths. (Automatic Fault Isolation checks the low-band RF path.) An external microwave source with a frequency range of 5 to 20 GHz is required. The source is not controlled over HP-IB. The user sets the source to one of four frequencies: 5, 10, 15, or 20 GHz at −10 dBm. (The TAM expects −10 dBm at the input of the HP 8562A/B; the amplitude at the source output may have to be higher to account for cable loss.)

The four frequencies provide a signal for each of the four bands in high band. The TAM checks the operation of the A9 Input Attenuator and the A8 Dual Mixer at 5 GHz. If no signal is present, the TAM will use the 298 MHz SIG ID Oscillator, as is done in AFI. At 10, 15, and 20 GHz, the TAM simply checks signal presence.

Note RF Path Fault Isolation will not be able to find slight problems in frequency response; the tolerances of the measurements are too coarse.

Cal Oscillator Troubleshooting

Cal Oscillator Troubleshooting enables front-panel control of the A16 Cal Oscillator Assembly's oscillator. The Cal Oscillator can be fixed-tuned to three different frequencies. The Cal Oscillator may also be set to one of five sweep widths, centered at 10.7 MHz.

Fixed-tuned settings:

11.5 MHz
10.7 MHz
9.9 MHz

Sweep-width settings:

20 kHz
10 kHz
4 kHz
2 kHz
0.7 kHz

Cal Oscillator Troubleshooting sends A16's output (−35 dBm) to the A5 IF Assembly. On the A5 IF Assembly all crystal filter poles are shorted, all LC poles enabled, and the 15 dB attenuator disabled. Signals from the RF Section are attenuated as much as possible.

Error Messages

The HP 8562 displays error messages in the lower right-hand corner of the CRT display. (A number, or error code, is associated with each error message.) These error messages alert the user to errors in spectrum analyzer function or use. Multiple error messages may exist simultaneously. Refer to "Viewing Multiple Messages" below.

	Page
Viewing Multiple Messages	7-14
Error Message Elimination	7-14
Remote HP-IB Errors (100 to 150)	7-14
System Errors (200 to 201)	7-15
ADC Errors (250 to 251)	7-16
YTO Loop Errors (300 to 301)	7-16
Roller PLL Errors (302 to 316)	7-16
YTO Loop Errors (317 to 318)	7-18
Roller Oscillator Errors (321 to 329)	7-18
YTO Loop Errors (331)	7-19
600 MHz Reference Loop (333)	7-20
YTO Leveling Loop (334)	7-20
Sampling Oscillator (335)	7-20
Automatic IF Errors (400 to 599)	7-20
ADC Errors (600 to 651)	7-27
EEROM Checksum Errors (700 to 704)	7-27
Program ROM Checksum Errors (705 to 710)	7-28
RAM Check Errors (711 to 716)	7-28
Microprocessor Error (717)	7-29
Battery Problem (718)	7-29
System Errors (750 to 755)	7-29
Module Errors (800 to 899)	7-29

Viewing Multiple Messages

Although multiple errors may exist, the HP 8562 displays only one error message at one time. To view any additional messages, do the following;

1. Press (RECALL) and MORE.
2. Press RECALL ERRORS. An error message will be displayed in the active function block.
3. Use the up and down step keys to scroll through any other error messages which might exist, making note of each error code.

Error Message Elimination

When an error message is displayed, always perform the following procedure.

1. Press (SAVE) and SAVE STATE.
2. Store the current state in a convenient STATE register. (It may be necessary to set SAVELOCK to OFF.)
3. Press (PRESET) and REALIGN LO & IF. Wait for the sequence to finish.
4. Press (RECALL) and RECALL STATE.
5. Recall the previously stored STATE.
6. If an error message is still displayed, refer to the list of error messages below for an explanation of the error messages.

Remote HP-IB Errors (100 to 150)

Refer to the *HP 8562 Spectrum Analyzer Operating and Programming Manual* for information on programming the analyzer.

100 NO PWRON	Power-on state is invalid; default state is loaded. Press (SAVE),PWR ON STATE to clear error message.
101 NO STATE	State to be RECALLed not valid or not SAVEd.
106 ABORTED!	Current operation is aborted; HP-IB parser reset.
107 HELLO ??	No HP-IB listener is present.
108 TIME OUT	Analyzer timed out when acting as controller.
109 CtrlFail	Analyzer unable to take control of the bus.
110 NOT CTRL	Analyzer is not system controller.
111 # ARGMTS	Command does not have enough arguments.
112 ??CMD??	Unrecognized command.
113 FREQ NO!	Command cannot have frequency units.
114 TIME NO!	Command cannot have time units.
115 AMPL NO!	Command cannot have amplitude units.
116 ?UNITS??	Unrecognizable units.

117 NOP NUM	Command cannot have numeric units.
118 NOP EP	Enable parameter cannot be used.
119 NOP UPDN	UP/DN are not valid arguments for command.
120 NOP ON/OF	ON/OFF are not valid arguments for command.
121 NOP ARG	AUTO/MAN are not valid arguments for command.
122 NOP TRC	Trace registers are not valid for command.
123 NOP ABLK	A-block format not valid here.
124 NOP IBLK	I-block format not valid here.
125 NOP STRNG	Strings are not valid for this command.
126 NO ?	This command cannot be queried.
127 BAD DTMD	Not a valid peak detector mode.
128 PK WHAT?	Not a valid peak search parameter.
129 PRE TERM	Premature A-block termination.
130 BAD TDF	Arguments are only for TDF command.
131 ?? AM/FM	AM/FM are not valid arguments for this command.
132 !FAV/RMP!	FAV/RAMP are not valid arguments for this command.
133 !INT/EXT!	INT/EXT are not valid arguments for this command.
134 ??? ZERO	ZERO is not a valid argument for this command.
135 ??? CURR	CURR is not a valid argument for this command.
136 ??? FULL	FULL is not a valid argument for this command.
137 ??? LAST	LAST is not a valid argument for this command.
138 !GRT/DSP	GRT/DSP are not valid arguments for this command.
139 PLOTONLY	Argument can only be used with PLOT command.
140 ?? PWRON	PWRON is not a valid argument for this command.
141 BAD ARG	Argument can only be used with FDIAG command.
142 BAD ARG	Query expected for FDIAG command.
143 NO PRESL	Attempt to control preselector which is not present in HP 8562B.

System Errors (200 to 201)

These errors are directly related to the ADC/Interface Section. Suspect a faulty A2 Controller or A3 Interface assembly.

200 SYSTEM	Hardware/firmware interaction; check other errors.
201 SYSTEM	Hardware/firmware interaction; check other errors.

ADC Errors (250 to 251)

These errors often require troubleshooting the A2 Controller and A3 Interface assemblies.

250 OUTOF RG	ADC input is outside of ADC range.
251 NO IRQ	Microprocessor not receiving interrupt from ADC.

YTO Loop Errors (300 to 301)

These errors often require troubleshooting the A14 Frequency Control assembly (Synthesizer Section) or the ADC circuits.

300 YTO UNLK	YTO (1st LO) Loop is unlocked. The ADC measures YTO_ERR voltage under phase-lock condition. ERR 301 is set if the voltage is outside certain limits.
301 YTO UNLK	YTO Loop is unlocked. Same as ERR 300.

Roller PLL Errors (302 to 316)

These errors indicate a faulty Roller Oscillators on the A14 Frequency Control Assembly. Refer to Chapter 11. The A3 Interface's ADC circuits may also be faulty. If error codes 333 and 499 are present, suspect the 10 MHz Reference on the A15 assembly.

302 OFF UNLK	Offset Roller Oscillator PLL is unlocked. May indicate loss of 10 MHz reference. The 10 MHz reference should measure greater than −7 dBm at A15J303. The ADC measures OFFSENSE at the beginning of each sweep and, if the voltage is outside certain limits, the Offset Oscillator Pretune DAC is adjusted to bring OFFSENSE within the proper range. ERR 302 is set if this cannot be accomplished.
303 XFR UNLK	Transfer Roller Oscillator PLL is unlocked. May indicate loss of 10 MHz reference. The 10 MHz reference should measure greater than −7 dBm at A15J303. The ADC measures XFRSENSE at the beginning of each sweep and, if the voltage is outside certain limits, the Transfer Oscillator Pretune DAC is adjusted to bring XFRSENSE within the proper range. ERR 303 is set if this cannot be accomplished.
304 ROL UNLK	Main Roller Oscillator PLL is unlocked. May indicate loss of 10 MHz reference. The 10 MHz reference should measure greater than −7 dBm at A15J303. The ADC measures MAINSENSE at the beginning of each sweep and, if the voltage is outside certain limits, the Main Roller Pretune DAC is adjusted to bring OFFSENSE within the proper range. ERR 304 is set if this cannot be accomplished.
305 FREQ ACC	Unable to adjust MAINSENSE close to zero volts using the Coarse Adjust DAC. The Coarse Adjust and Fine Adjust DAC are used together to set MAINSENSE to zero volts with the loop opened. ERR 305 is set if the Coarse Adjust DAC cannot bring MAINSENSE close enough to zero volts for the Fine Adjust DAC to bring MAINSENSE to exactly zero volts.

306 FREQ ACC	Unable to adjust MAINSENSE to zero volts using the Fine Adjust DAC. The Coarse Adjust and Fine Adjust DAC are used together to set MAINSENSE to zero volts with the loop opened. ERR 306 is set if the Fine Adjust DAC cannot bring MAINSENSE to zero volts.
307 FREQ ACC	Transfer Oscillator Pretune DAC out of range. The Transfer Oscillator pretune procedure attempts to find pretune DAC values by programming the PLL to 25 different frequencies and incrementing the Transfer Oscillator Pretune DAC until XFRSENSE changes polarity. ERR 307 is set if the DAC is set to 255 (maximum) before XFRSENSE changes polarity.
308 FREQ ACC	Offset Oscillator Pretune DAC not within prescribed limits at low frequency. The Offset Oscillator Pretune DAC is set to provide a frequency less than 189 MHz while the PLL is programmed for 189 MHz. ERR 308 is set if XFRSENSE is greater than +5 V (it should be at the negative rail).
309 FREQ ACC	Offset Oscillator Pretune DAC not within prescribed limits at high frequency. The Offset Oscillator Pretune DAC is set to provide a frequency less than 204 MHz while the PLL is programmed for 204 MHz. ERR 309 is set if XFRSENSE is greater than +5 V (it should be at the negative rail).
310 FREQ ACC	Main Roller Pretune DAC set to 255. The Main Roller Pretune DAC is set to 5, causing MAINSENSE to go to the positive rail. The DAC is incremented until MAINSENSE changes polarity. ERR 310 is set if the DAC is set to 255 before MAINSENSE changes to a negative polarity.
311 FREQ ACC	Main Roller Pretune DAC set to 255. The Main Roller Pretune DAC is set to 5, causing MAINSENSE to go to the positive rail. The DAC is incremented until MAINSENSE changes polarity. ERR 311 is set if the DAC is set to 255 before MAINSENSE changes to a negative polarity.
312 FREQ ACC	Unable to adjust MAINSENSE to zero volts using the Fine Adjust DAC. The Coarse Adjust and Fine Adjust DAC are used together to set MAINSENSE to zero volts with the loop opened. ERR 312 is set if the Fine Adjust DAC cannot bring MAINSENSE to zero volts.
313 FREQ ACC	Error in LO synthesis algorithm. ERR 313 is set if a combination of Sampler Oscillator and Roller Oscillator frequencies could not be found to correspond to the required YTO start frequency. Contact the factory.

314 FREQ ACC Indicate problems in the span calibration. Troubleshoot any unlocks before attempting to troubleshoot span calibration problems because the loops must all lock in order to perform the calibration. If LO spans >>1 MHz are correct, check A14U114B , A14U115A, A14U116, or A14Q101. This error message appears when the Main Roller Oscillator sweep sensitivity is zero. A sweep ramp is injected into the locked Main Roller loop which should generate a negative-going ramp on MAINSENSE. ERR 314 is set if the slope of this ramp is zero. This is an indication of an unlocked Main Roller loop or lack of a sweep ramp.

315 FREQ ACC Indicates problems in the span calibration. Troubleshoot any unlocks before attempting to troubleshoot span calibration problems because the loops must all lock in order to perform the calibration. If LO spans >>1 MHz are correct, check A14U114B , A14U115A, A14U116, or A14Q101. This error message appears when the Roller Span Attenuator DAC is out of range. This DAC value is recalculated each time there are changes to the span or start frequency. ERR 315 is set if this value is less than 10 or greater than 245.

316 FREQ ACC Sensitivity of Main Roller Pretune DAC is zero. Once the Main Roller is locked, the MAINSENSE voltage is measured and the Pretune DAC value is incremented by two. ERR 316 is set if the difference between the new MAINSENSE voltage and the previous MAINSENSE voltage is zero.

YTO Loop Errors (317 to 318)

These messages indicate that the YTO's main-coil coarse DAC (ERR 317) or fine DAC (ERR 318) is at its limit. If error codes 300 or 301 are not present, a hardware problem exists in the YTO loop but the loop can still acquire lock. Refer to Chapter 11 to troubleshoot the YTO PLL. The ADC circuit on the A3 Interface Assembly may also cause this error.

317 FREQ ACC Main Coil Coarse DAC at limit. The Main Coil Coarse DAC is set to bring YTO ERR close enough to zero volts for the Main Coil Fine DAC to bring YTO ERR to exactly zero volts. ERR 317 is set if the Main Coil Coarse DAC is set to one of its limits before bringing YTO ERR close enough to zero volts.

318 FREQ ACC Main Coil Fine DAC at limit. The Main Coil Fine DAC is set to bring YTO ERR to zero volts after the Main Coil Coarse DAC has brought YTO ERR close to zero volts. ERR 318 is set if the Main Coil Fine DAC is set to one of its limits before bringing YTO ERR to zero volts.

Roller Oscillator Errors (321 to 329)

These errors indicate a faulty Roller Oscillators on the A14 Frequency Control Assembly. Refer to Chapter 11. The A3 Interface's ADC circuits may also be faulty. If error codes 333 and 499 are also present, suspect the 10 MHz Reference on the A15 assembly.

321 FREQ ACC Main Roller tuning sensitivity is not greater than zero. The MAINSENSE voltage is noted in a locked condition and the Main Roller is programmed to a frequency 400 kHz higher. ERR 321 is

set if the new MAINSENSE voltage is not greater than the previous MAINSENSE voltage.

322 FREQ ACC Main Roller Pretune DAC value set greater than 255. During the LO ADJUST sequence, the Main Roller is locked and then programmed to a frequency 1.6 MHz higher. A new Pretune DAC value is calculated based upon the Main Roller tuning sensitivity. ERR 322 is set if this calculated value is greater than 255.

324 FREQ ACC Unable to adjust MAINSENSE close to zero volts using the Coarse Adjust DAC. The Coarse Adjust and Fine Adjust DAC are used together to set MAINSENSE to zero volts with the loop opened. ERR 324 is set if the Coarse Adjust DAC cannot bring MAINSENSE close enough to zero volts for the Fine Adjust DAC to bring MAINSENSE to exactly zero volts.

325 FREQ ACC Unable to adjust MAINSENSE to zero volts using the Fine Adjust DAC. The Coarse Adjust and Fine Adjust DAC are used together to set MAINSENSE to zero volts with the loop opened. ERR 325 is set if the Fine Adjust DAC cannot bring MAINSENSE to zero volts.

326 FREQ ACC Fine Adjust DAC near end of range. The Fine Adjust DAC is set to bring MAINSENSE to zero volts. ERR 326 is set if the Fine Adjust DAC value is set to less than 5 or greater than 250.

327 OFF UNLK Offset Roller Oscillator PLL is unlocked. May indicate loss of 10 MHz reference. The 10 MHz reference should measure greater than −7 dBm at A15J303. The ADC measures OFFSENSE at the beginning of each sweep and, if the voltage is outside certain limits, the Offset Oscillator Pretune DAC is adjusted to bring OFFSENSE within the proper range. ERR 327 is set if this cannot be accomplished.

328 FREQ ACC Roller Fine Adjust DAC sensitivity less than or equal to zero. During the LO ADJUST routine, the Fine Adjust DAC is set to two different values and the MAINSENSE voltage is measured at each setting. ERR 328 is set if the difference between these voltages is zero or negative. This is typically the result of the Main Roller loop being unlocked.

329 FREQ ACC Roller Coarse Adjust DAC sensitivity less than or equal to zero. During the LO ADJUST routine, the Coarse Adjust DAC is set to two different values and the MAINSENSE voltage is measured at each setting. ERR 329 is set if the difference between these voltages is zero or negative. This is typically the result of the Main Roller loop being unlocked.

YTO Loop Errors (331)

This error rarely occurs but is usually indicative of a digital hardware failure.

331 FREQ ACC Invalid YTO frequency. Firmware attempted to set the YTO to a frequency outside the range of the YTO (2.95 to 6.8107 GHz). Suspect a digital hardware problem, such as a bad RAM on the A2 Controller Assembly. Contact the factory.

600 MHz Reference Loop (333)

This error requires troubleshooting the A14 Frequency Control assembly (Synthesizer Section) or the ADC circuits.

333 600 UNLK	The 600 MHz Reference Oscillator PLL is unlocked. If error codes 302, 303, 304, 327 or 499 are also present, suspect the 10 MHz Reference on the A15 RF Assembly. ERR 333 is set if LO3ERR is outside of its prescribed limits.

YTO Leveling Loop (334)

This error often requires troubleshooting the A14 Frequency Control Assembly or A7 LODA (Synthesizer Section) or the ADC circuits.

334 LO AMPL	1ST LO Distribution Amplifier is unlevelled. This error may occur if the 50Ω load is not connected to the 1st LO output port. This error is usually accompanied by error codes 300 and/or 301. ERR 301 YTO UNLK will be cleared once ERR 334 has been cleared. Check the output of the A11 YTO with the jumper on A14J23 in the TEST position. The YTO power output should be between +9 and +13 dBm. If the YTO is working properly, refer to "A7 LODA Drive" in Chapter 12. The LODA AGC voltage is monitored by the ADC. ERR 334 is set if LODA AGC is outside of its prescribed limits. Refer to "A7 LODA Drive" in Chapter 12.

Sampling Oscillator (335)

This error indicates an unlocked Sampling Oscillator (also known as the Offset Lock Loop). This error message is not available in firmware revisions 861218 and 870312.

335 SMP UNLK	Sampling Oscillator PLL is unlocked. ERR 335 is set if OFL_ERR is outside its prescribed limits.

Automatic IF Errors (400 to 599)

These error codes are generated when the automatic IF adjustment routine detects a fault. This routine first adjusts amplitude parameters, then resolution bandwidths in this sequence: 300 kHz, 1 MHz, 100 kHz, 30 kHz, 10 kHz, 3 kHz, 1 kHz, 300 Hz, 100 Hz, and 2 MHz. The routine will restart from the beginning if a fault is detected. Parameters adjusted after the routine begins but before the fault is detected are correct; parameters adjusted later in the sequence are suspect. Refer to "Automatic IF Adjustment" in Chapter 9.

The IF Section relies upon the ADC and video circuitry to perform its continuous IF adjustments. IF-related errors occur if the ADC, video circuitry, or A4 assembly's linear path is faulty.

Errors 405 to 416: When these 10K resolution bandwidth (RBW) error messages appear, use the following steps to check for errors 581 or 582.

1. Set the HP 8562 LINE switch OFF.
2. Set the HP 8562 LINE switch ON and observe the lower right-hand corner of the display for 10 seconds.

3. If ERR 581 or ERR 582 appears, the fault is most likely on the A16 Cal Oscillator. Refer to errors 581 and 582.
4. If ERR 581 or ERR 582 does not appear, troubleshoot the A5 IF Assembly.

Multiple IF Errors During IF Adjust: If a FULL IF ADJ sequence (press (AMPLITUDE), MORE, IF ADJUST, and FULL IF ADJ) results in IF errors while displaying IF ADJUST STATUS: AMPLITUDE, A16 might not be providing the correct output signal. Perform the following steps:

1. Disconnect W30 (white) from A5J4.
2. Connect W30 to the input of a second spectrum analyzer and set this analyzer to the following settings:

   Center Frequency ..... 10.7 MHz
   Reference Level ..... −30 dBm

3. Observe the spectrum analyzer display while pressing FULL IF ADJ on the HP 8562. If a −35 dBm signal does not appear, troubleshoot the A16 Cal Oscillator.
4. If a −35 dBm signal does appear, troubleshoot the A5 IF Assembly.

400 AMPL 100	Unable to adjust amplitude of 100 Hz RES BW.
401 AMPL 300	Unable to adjust amplitude of 300 Hz RES BW.
402 AMPL 1K	Unable to adjust amplitude of 1 kHz RES BW.
403 AMPL 3K	Unable to adjust amplitude of 3 kHz RES BW.
404 AMPL 10K	Unable to adjust amplitude of 10 kHz RES BW.
405 RBW 10K	Unable to adjust 10 kHz RES BW in First XTAL Pole.
406 RBW 10K	Unable to adjust 10 kHz RES BW in Second XTAL Pole.
407 RBW 10K	Unable to adjust 10 kHz RES BW in Third XTAL Pole.
408 RBW 10K	Unable to adjust 10 kHz RES BW in Fourth XTAL Pole.
409 RBW 10K	Unable to adjust 10 kHz RES BW in First XTAL Pole.
410 RBW 10K	Unable to adjust 10 kHz RES BW in Second XTAL Pole.
411 RBW 10K	Unable to adjust 10 kHz RES BW in Third XTAL Pole.
412 RBW 10K	Unable to adjust 10 kHz RES BW in Fourth XTAL Pole.
413 RBW 10K	Unable to adjust 10 kHz RES BW in First XTAL Pole.
414 RBW 10K	Unable to adjust 10 kHz RES BW in Second XTAL Pole.
415 RBW 10K	Unable to adjust 10 kHz RES BW in Third XTAL Pole.
416 RBW 10K	Unable to adjust 10 kHz RES BW in Fourth XTAL Pole.
417 RBW 3K	Unable to adjust 3 kHz RES BW in First XTAL Pole.
418 RBW 3K	Unable to adjust 3 kHz RES BW in Second XTAL Pole.
419 RBW 3K	Unable to adjust 3 kHz RES BW in Third XTAL Pole.
420 RBW 3K	Unable to adjust 3 kHz RES BW in Fourth XTAL Pole.

421 RBW 10K	Unable to adjust 10 kHz RES BW in First XTAL Pole.
422 RBW 10K	Unable to adjust 10 kHz RES BW in Second XTAL Pole.
423 RBW 10K	Unable to adjust 10 kHz RES BW in Third XTAL Pole.
424 RBW 10K	Unable to adjust 10 kHz RES BW in Fourth XTAL Pole.
425 RBW 3K	Unable to adjust 3 kHz RES BW in First XTAL Pole.
426 RBW 3K	Unable to adjust 3 kHz RES BW in Second XTAL Pole.
427 RBW 3K	Unable to adjust 3 kHz RES BW in Third XTAL Pole.
428 RBW 3K	Unable to adjust 3 kHz RES BW in Fourth XTAL Pole.
429 RBW 100	Unable to adjust 100 Hz RES BW.
430 RBW 300	Unable to adjust 300 Hz RES BW.
431 RBW 1K	Unable to adjust 1 kHz RES BW.
432 RBW 3K	Unable to adjust 3 kHz RES BW.
433 RBW 10K	Unable to adjust 10 kHz RES BW.
434 RBW 300	300 Hz RES BW amplitude low in First XTAL Pole.
435 RBW 300	300 Hz RES BW amplitude low in Second XTAL Pole.
436 RBW 300	300 Hz RES BW amplitude low in Third XTAL Pole.
437 RBW 300	300 Hz RES BW amplitude low in Fourth XTAL Pole.
438 RBW 1K	1 kHz RES BW amplitude low in First XTAL Pole.
439 RBW 1K	1 kHz RES BW amplitude low in Second XTAL Pole.
440 RBW 1K	1 kHz RES BW amplitude low in Third XTAL Pole.
441 RBW 1K	1 kHz RES BW amplitude low in Fourth XTAL Pole.
442 RBW 3K	3 kHz RES BW amplitude low in First XTAL Pole.
443 RBW 3K	3 kHz RES BW amplitude low in Second XTAL Pole.
444 RBW 3K	3 kHz RES BW amplitude low in Third XTAL Pole.
445 RBW 3K	3 kHz RES BW amplitude low in Fourth XTAL Pole.
446 RBW 10K	10 kHz RES BW amplitude low in First XTAL Pole.
447 RBW 10K	10 kHz RES BW amplitude low in Second XTAL Pole.
448 RBW 10K	10 kHz RES BW amplitude low in Third XTAL Pole.
449 RBW 10K	10 kHz RES BW amplitude low in Fourth XTAL Pole.
450 IF SYSTM	IF hardware failure. Check other error messages.
451 IF SYSTM	IF hardware failure. Check other error messages.
452 IF SYSTM	IF hardware failure. Check other error messages.
454 AMPL	Unable to adjust step gain amplifiers.
455 AMPL	Unable to adjust Fine Attenuator.
456 AMPL	Unable to adjust Fine Attenuator.

457 AMPL	Unable to adjust Fine Attenuator.
458 AMPL	Unable to adjust First Step Gain Stage.
459 AMPL	Unable to adjust First Step Gain Stage.
460 AMPL	Unable to adjust First Step Gain Stage.
461 AMPL	Unable to adjust Second Step Gain Stage.
462 AMPL	Unable to adjust Second Step Gain Stage.
463 AMPL	Unable to adjust Third Step Gain Stage.
464 AMPL	Unable to adjust Third Step Gain Stage.
465 AMPL	Unable to adjust Third Step Gain Stage.
466 LIN AMPL	Unable to adjust linear amplifier scale.
467 AMPL	Unable to adjust step gain amplifiers.
468 AMPL	Unable to adjust Third Step Gain Stage.
469 AMPL	Unable to adjust step gain amplifiers.
470 AMPL	Unable to adjust Third Step Gain Stage.
471 RBW 30K	Unable to adjust 30 kHz RES BW in First LC Pole.
472 RBW 100K	Unable to adjust 100 kHz RES BW in First LC Pole.
473 RBW 300K	Unable to adjust 300 kHz RES BW in First LC Pole.
474 RBW 1M	Unable to adjust 1 MHz RES BW in First LC Pole.
475 RBW 30K	Unable to adjust 30 kHz RES BW in Second LC Pole.
476 RBW 100K	Unable to adjust 100 kHz RES BW in Second LC Pole.
477 RBW 300K	Unable to adjust 300 kHz RES BW in Second LC Pole.
478 RBW 1M	Unable to adjust 1 MHz RES BW in Second LC Pole.
483 RBW 10K	Unable to adjust 10 kHz RES BW.
484 RBW 3K	Unable to adjust 3 kHz RES BW.
485 RBW 1K	Unable to adjust 1 kHz RES BW.
486 RBW 300	Unable to adjust 300 Hz RES BW.
487 RBW 100	Unable to adjust 100 Hz RES BW.
488 RBW 10	Unable to adjust 100 Hz RES BW.
489 RBW 100	Unable to adjust 100 Hz RES BW.
490 RBW 100	Unable to adjust 100 Hz RES BW.
491 RBW 100	Unable to adjust 100 Hz RES BW.
492 RBW 300	Unable to adjust 300 Hz RES BW.
493 RBW 1K	Unable to adjust 1 kHz RES BW.
494 RBW 3K	Unable to adjust 3 kHz RES BW.
495 RBW 10K	Unable to adjust 10 kHz RES BW.

496 RBW 100	Unable to adjust 100 Hz RES BW.
497 RBW 100	Unable to adjust 100 Hz RES BW.
498 RBW 100	Unable to adjust 100 Hz RES BW.
499 CAL UNLK	A16 Cal Oscillator is unlocked. Verify the unlocked conditions as follows:

1. Place A16 in its service position and disconnect W17 (gray-yellow) from A16J1.
2. Connect W17 to the input of another spectrum analyzer. This is the 10 MHz reference for A16.
3. If a 10 MHz signal (approximately 0 dBm) is not present, suspect the A15 RF Assembly. If the 10 MHz reference is present, continue with step 4.
4. Reconnect W17 to A16J1 and monitor the tune voltage at A16J4 pin 3 with an oscilloscope.
5. Press (PRESET) on the HP 8562.
6. If the voltage is either +15 V dc or −15 V dc, the A16 Cal Oscillator is probably at fault. Normally, the voltage should be near +15 V during a sweep, and between −9 V and +9 V during retrace.

An **intermittent** error 499 indicates the A16 phase-locked-loop probably can lock at 10.7 MHz, but cannot lock at the 9.9 and 11.5 MHz extremes. This may prevent the Cal Oscillator from adjusting the 1 MHz or 30 kHz through 300 kHz bandwidths. This symptom implies a failure in the oscillator, function block B. (See the A16 Cal Oscillator schematic at the end of Volume 2.) The oscillator is unable to tune the required frequency range with the −9 V to +9 V control voltage. Troubleshoot A16CR1 (most probable cause), L1, C3, C4, and U3.

500 AMPL 30K	Unable to adjust amplitude of 30 kHz RES BW.
501 AMPL .1M	Unable to adjust amplitude of 100 kHz RES BW.
502 AMPL .3M	Unable to adjust amplitude of 300 kHz RES BW.
503 AMPL 1M	Unable to adjust amplitude of 1 MHz RES BW.
504 AMPL 30K	Unable to adjust amplitude of 30 kHz RES BW.
505 AMPL .1M	Unable to adjust amplitude of 100 kHz RES BW.
506 AMPL .3M	Unable to adjust amplitude of 300 kHz RES BW.
507 AMPL 1M	Unable to adjust amplitude of 1 MHz RES BW.
508 AMPL 30K	Unable to adjust amplitude of 30 kHz RES BW.
509 AMPL .1M	Unable to adjust amplitude of 100 kHz RES BW.
510 AMPL .3M	Unable to adjust amplitude of 300 kHz RES BW.
511 AMPL 1M	Unable to adjust amplitude of 1 MHz RES BW.
512 RBW 100	Unable to adjust 100 Hz RES BW.
513 RBW 300	Unable to adjust 300 Hz RES BW.
514 RBW 1K	Unable to adjust 1 kHz RES BW.
515 RBW 3K	Unable to adjust 3 kHz RES BW.

516 RBW 10K	Unable to adjust 10 kHz RES BW.
517 RBW 100	Unable to adjust 100 Hz RES BW.
518 RBW 300	Unable to adjust 300 Hz RES BW.
519 RBW 1K	Unable to adjust 1 kHz RES BW.
520 RBW 3K	Unable to adjust 3 kHz RES BW.
521 RBW 10K	Unable to adjust 10 kHz RES BW.
522 RBW 10K	Unable to adjust symmetry of 10 kHz RES BW in First XTAL Pole.
523 RBW 10K	Unable to adjust symmetry of 10 kHz RES BW in Second XTAL Pole.
524 RBW 10K	Unable to adjust symmetry of 10 kHz RES BW in Third XTAL Pole.
525 RBW 10K	Unable to adjust symmetry of 10 kHz RES BW in Fourth XTAL Pole.
550 LOG AMPL	Unable to adjust amplitude of log scale.
551 AMPL	Unable to adjust step gain amplifiers.
552 LOG AMPL	Unable to adjust amplitude of log scale.
553 LOG AMPL	Unable to adjust amplitude of log scale.
554 LOG AMPL	Unable to adjust amplitude of log scale.
555 LOG AMPL	Unable to adjust amplitude of log scale.
556 LOG AMPL	Unable to adjust amplitude of log scale.
557 LOG AMPL	Unable to adjust amplitude of log scale.
558 LOG AMPL	Unable to adjust amplitude of log scale.
559 LOG AMPL	Unable to adjust amplitude of log scale.
560 LOG AMPL	Unable to adjust amplitude of log scale.
561 LOG AMPL	Unable to adjust amplitude of log scale. Possible problem in Second Step Gain Stage.
562 LOG AMPL	Unable to adjust amplitude of log scale. Possible problem in Second Step Gain Stage.
563 LOG AMPL	Unable to adjust amplitude of log scale. Possible problem in Third Step Gain Stage.
564 LOG AMPL	Unable to adjust amplitude of log scale.
565 LOG AMPL	Unable to adjust amplitude of log scale.
566 LOG AMPL	Unable to adjust amplitude of log scale.
567 LOG AMPL	Unable to adjust amplitude of log scale. Possible problem in Log Offset/Log Expand stage.
568 LOG AMPL	Unable to adjust amplitude of log scale. Possible problem in Log Offset/Log Expand stage.
569 LOG AMPL	Unable to adjust amplitude of log scale. Possible problem in Log Offset/Log Expand stage.

570 LOG AMPL	Unable to adjust amplitude of log scale. Possible problem in Log Offset/Log Expand stage.
571 AMPL	Unable to adjust step gain amplifiers.
572 AMPL 1M	Unable to adjust amplitude of 1 MHz RES BW.
573 LOG AMPL	Unable to adjust amplitude of log scale. Check Video Offset circuitry.
574 LOG AMPL	Unable to adjust amplitude of log scale. Check Video Offset circuitry.
575 LOG AMPL	Unable to adjust amplitude of log scale. Check Video Offset circuitry.
576 LOG AMPL	Unable to adjust amplitude of log scale. Check Video Offset circuitry.
577 LOG AMPL	Unable to adjust amplitude of log scale. Check Video Offset circuitry.
581 AMPL	Unable to adjust 100 kHz and 10 kHz RES BWs. Refer to Error 582.
582 AMPL	Unable to adjust 100 kHz and 10 kHz RES BW's. Test the 100 kHz RES BW filter's 3 dB bandwidth as follows:

1. Connect the CAL OUTPUT signal to the INPUT 50Ω.
2. Press (PRESET) and set the controls as follows:

CENTER FREQ	300 MHz
SPAN	500 kHz
RES BW	100 kHz
LOG dB/div	1 dB
REF LEVEL	adjust to place signal peak at top of the screen

3. Press (PEAK SEARCH) and MARKER DELTA and use the knob to position the marker until the delta MKR reads −3 dB ±0.1 dB.
4. Press MARKER DELTA and move the marker to the other side of the filter until the delta MKR reads 0 dB ±0.1 dB.
5. If the delta MKR frequency is between 90 kHz and 110 kHz, the 100 kHz RES BW is working properly. If the frequency is outside these limits, read the following information on the A16 Cal Oscillator's sweep generator.

If the 100 kHz RES BW works properly, the A16 assembly's sweep generator is failing to sweep its oscillator's frequency at the correct rate. The error is detected in sweeping on the skirts of the 100 kHz RES BW.

A properly operating sweep generator generates a series of negatively-going parabolas. These parabolas generate the sweeps used to adjust resolution bandwidths of 10 kHz and below. Check the sweep generator with the following steps. Refer also to "100 Hz to 3 kHz RES BW Out of Specification" in the A16 troubleshooting text in Chapter 9.

1. Connect an oscilloscope probe to A16U10 pin 8.
2. On the HP 8562 press (AMPLITUDE), MORE, IF ADJUST, and FULL IF ADJ.
3. Approximately 8 seconds after starting the FULL IF ADJ, check for negative-going parabolas (similar to half-sine waves) 5 ms wide and approximately −4 V at their peak. Refer to Chapter 9, "IF Section," for more information on the A16 assembly.

583 RBW 30K	Unable to adjust 30 kHz RES BW.

584 RBW 100K	Unable to adjust 100 kHz RES BW.
585 RBW 300K	Unable to adjust 300 kHz RES BW.
586 RBW 1M	Unable to adjust 1 MHz RES BW.
587 RBW 30K	Unable to adjust 30 kHz RES BW.
588 RBW 100K	Unable to adjust 100 kHz RES BW.
589 RBW 300K	Unable to adjust 300 kHz RES BW.
590 RBW 1M	Unable to adjust 1 MHz RES BW.
591 LOG AMPL	Unable to adjust amplitude of log scale.
592 LOG AMPL	Unable to adjust amplitude of log scale.

ADC Errors (600 to 651)

ADC timeout errors will occur if the A2 Controller Assembly's frequency counter is faulty. Refer to Chapter 8, "ADC/Interface Section".

600 SYSTEM	Hardware/Firmware interaction; check other errors.
601 SYSTEM	Hardware/Firmware interaction; check other errors.
650 OUTOF RG	ADC input is outside of the ADC range.
651 NO IRQ	Microprocessor is not receiving interrupt from ADC.

EEROM Checksum Errors (700 to 704)

Faults on the A2 Controller Assembly cause these errors. Refer to Chapter 10, "Controller Section." Although some of these errors might result in a blanked display, it is possible to read these errors over HP-IB. Refer to "Troubleshooting to a Functional Section" in this chapter.

The EEROM on A2 is used to store data for frequency response correction, elapsed time, focus, intensity levels, and, in the HP 8562A, preselector tracking correction. Error codes from 700 to 704 indicate that some part of the data in EEROM is invalid. An EEROM error could result from either a defective EEROM or an improper sequence of storing data in EEROM. Check the EEROM with the following steps:

1. Place the WR PROT/WR ENA jumper on the A2 Controller Assembly in the WR ENA position.
2. On the HP 8562 press (INT), (FLATNESS), and FLATNESS DATA. Enter a value of 130. Press PREV MENU, STORE DATA, YES, (DISP), and MORE.
3. Press INTEN, enter an intensity value of 90, and press STORE INTEN.
4. Press FOCUS, enter a focus value of 128, and press STORE FOCUS.
5. If the analyzer is an HP 8562A, press (SAVE), SAVE PRSEL PK.
6. Turn the LINE switch off then on cycling the power.
7. If errors are still present, the EEROM A2U501 is defective. Refer the EEROM replacement procedure in Chapter 3.

700 EEROM	Checksum error of EEROM A2U501.
701 AMPL CAL	Checksum error of frequency response correction data.
702 ELAP TIM	Checksum error of elapsed time data.
703 AMPL CAL	Checksum error of frequency response correction data. Default values being used.
704 PRESELCT	Checksum error of customer preselector peak data. To clear the error press (RECALL), MORE, FACTORY PRESEL PK, (SAVE), and SAVE PRSEL PK.

Program ROM Checksum Errors (705 to 710)

The instrument's power-on diagnostics perform a checksum on each program ROM (A2 Controller assembly). If an invalid checksum is found for a particular ROM, an error code will be generated. If a defective Program ROM is found, replace it with another ROM with the same HP part number. Refer to Chapter 4, "Replaceable Parts."

Although some of these errors might result in a blanked display, it is possible to read these errors over HP-IB. Refer to "Troubleshooting to a Functional Section" in this chapter.

705 ROM U306	Checksum error of Program ROM A2U306.
706 ROM U307	Checksum error of Program ROM A2U307.
707 ROM U308	Checksum error of Program ROM A2U308.
708 ROM U309	Checksum error of Program ROM A2U309.
709 ROM U310	Checksum error of Program ROM A2U310.
710 ROM U311	Checksum error of Program ROM A2U311.

RAM Check Errors (711 to 716)

The instrument's power-on diagnostics check the program RAM. This including the two RAMs used for STATE storage. If any STATE information is found to be invalid, all data in that RAM will be destroyed. A separate error code is generated for each defective program RAM.

711 RAM U303	Checksum error of System RAM A2U303.
712 RAM U302	Checksum error of System RAM A2U302.
713 RAM U301	Checksum error of System RAM A2U301.
714 RAM U300	Checksum error of System RAM A2U300.
715 RAM U305	Checksum error of System RAM A2U305.
716 RAM U304	Checksum error of System RAM A2U304.

Microprocessor Error (717)

Refer to Chapter 10, "Controller Section."

717 BAD uP!!	Microprocessor not fully operational.

Battery Problem (718)

If STATE or TRACE data is found to be corrupt, the processor tests the Display RAMs and the Program RAMs containing the STATE information. If the RAMs are working properly, this error message is generated. To check the BT1 Battery and the battery backup circuitry, refer to "STATE and TRACE Storage Problems" in Chapter 10.

718 BATTERY?	Non-volatile RAM not working; check battery BT1.

System Errors (750 to 755)

These errors often require troubleshooting the A2 Controller and A3 Interface assemblies.

750 SYSTEM	Hardware/firmware interaction; check other errors.
751 SYSTEM	Hardware/firmware interaction; check other errors.
752 SYSTEM	Hardware/firmware interaction; check other errors.
753 SYSTEM	Hardware/firmware interaction; check other errors.
754 SYSTEM	Hardware/firmware interaction; check other errors.
755 SYSTEM	Hardware/firmware interaction; check other errors.

Module Errors (800 to 899)

These error codes are reserved for option modules, such as the HP 85629 Test and Adjustment Module and the HP 85620A Mass Memory Module. Refer to the option module's manual for a listing of error messages.

Option 003 (OCXO) Errors (905 to 907)

905 EXTREF	Unable to lock Cal Oscillator when set to external frequency reference. Check that the external 10 MHz reference is within tolerance.
906 OVENCOLD	The OCXO oven is cold.
907 DO IFCAL	Still performing IF Calibration, or in need of IF Calibration, which has not yet been done due to an OVENCOLD condition.

Block Diagram Description

The spectrum analyzer is comprised of the six main sections listed below. See Figure 7-3. The following descriptions apply to the Simplified Block Diagram and Overall Block Diagram located at the end of this chapter. Assembly level block diagrams are located in chapters 8 through 13.

	Page
RF Section	7-31
Synthesizer Section	7-33
IF Section	7-35
ADC Interface Section	7-36
Controller Section	7-37
Display/Power Supply Section	7-38

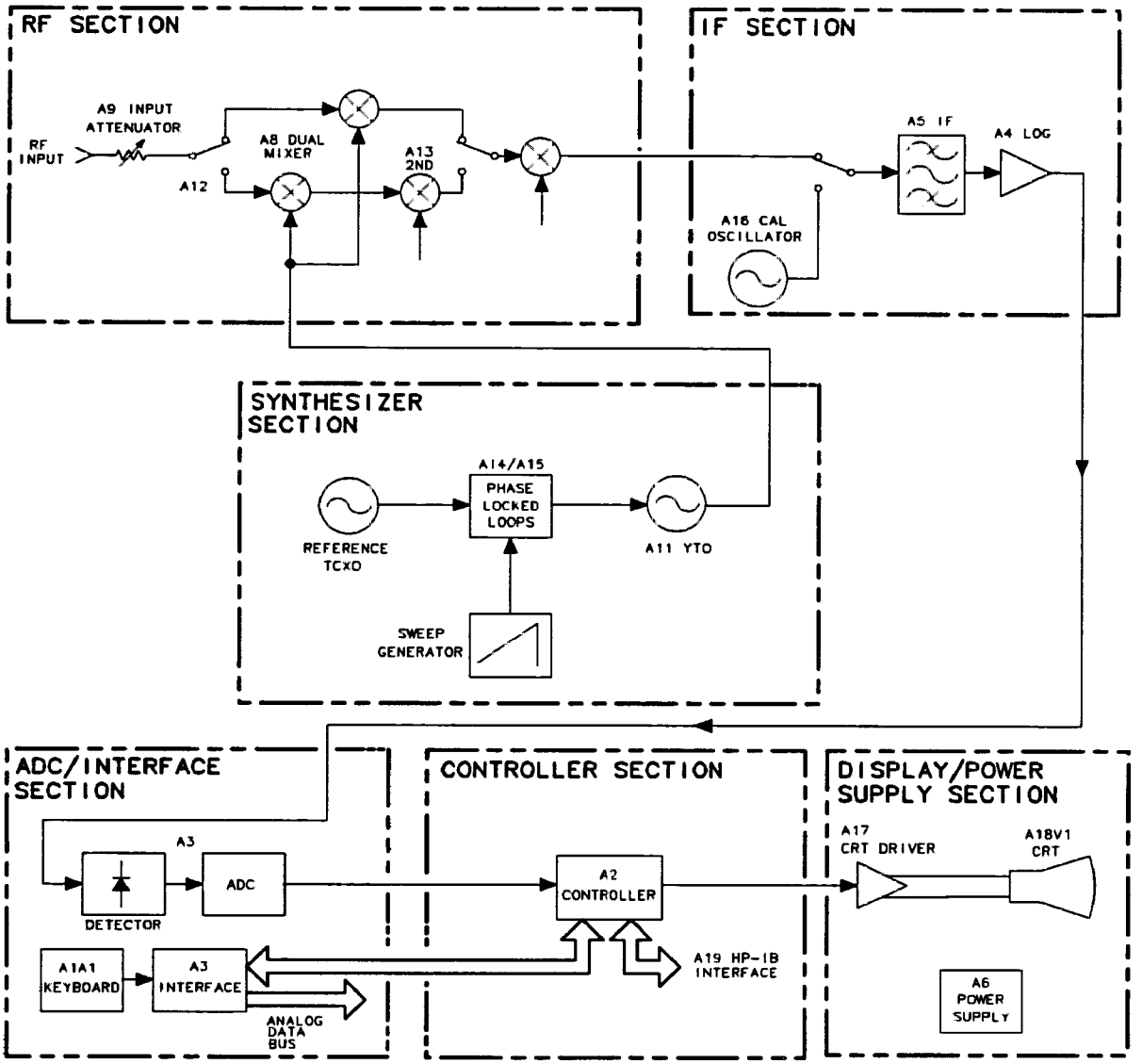

Figure 7-3. Functional Sections

RF Section

The RF Section includes the following assemblies:

A7 LODA (LO Distribution Amplifier)
A8 First Converter
A9 Input Attenuator
A10 YTF (YIG-Tuned Filter) *HP 8562A only*
A11 YTO (YIG-Tuned Oscillator)
A12 Input Switch
A13 Second Converter
A14 Frequency Control Assembly (also in Synthesizer Section)
A15 RF Assembly (also in Synthesizer Section)
AT1 Fixed Attenuator *HP 8562B*
FL1, 2, 3 Low Pass Filters *HP 8562A*

The RF Section converts all input signals to a fixed IF of 10.7 MHz. Five frequency bands cover the input range. The RF Section's microcircuits are controlled by signals from the A14 Frequency Control and A15 RF assemblies.

Band 0 ..... 1 kHz to 2.9 GHz
Band 1 ..... 2.75 GHz to 6.3 GHz
Band 2 ..... 5.86 to 13.0 GHz
Band 3 ..... 12.4 GHz to 19.7 GHz
Band 4 ..... 19.1 GHz to 22.0 GHz

Band 0 (low band) uses triple conversion to produce the final 10.7 MHz IF. A8 Dual Mixer up-converts the RF input to a first IF of 3.9107 GHz. A13 Second Converter down-converts the 3.9107 GHz IF to an IF of 310.7 MHz. A third conversion on the A15 RF assembly down-converts the second IF to the final 10.7 MHz third IF.

Bands 1 through 4 (high bands) use double conversion. A8 Dual Mixer down-converts the RF input to a first IF of 310.7 MHz. Although this IF passes through A13 Second Converter, it bypasses the second mixer. The second and final conversion occurs in the third converter where the second IF is down-converted to produce the final 10.7 MHz IF.

A7 LODA

The A7 LODA (First LO Distribution Amplifier) levels the output of the A11 YTO and distributes the power to the front-panel 1ST LO OUTPUT, A8 Dual Mixer, and A15A2 Sampler. The leveling circuitry is on the A14 Frequency Control Assembly.

A9 Input Attenuator

The attenuator is a 50Ω precision, coaxial step attenuator. Attenuation in 10 dB steps from 0 dB to 70 dB is accomplished by switching the signal path through one or more of the four resistive pads. The attenuator automatically sets to 70 dB when the analyzer turns off, providing ESD protection. (Note that the input attenuator is not field-repairable.)

A12 RF Switch

The RF Switch directs the RF input to either the low-band or high-band paths.

A8 Dual Mixer

A8 Dual Mixer contains two separate mixers; one for low band and one for high band. The low-band mixer is dc-coupled and contains a limiter. The high-band mixer uses ac coupling. A PIN diode switch (controlled by the A14 Frequency Control Assembly) directs the 1st LO to the appropriate mixer.

The A14 Frequency Control assembly provides a different high-band bias for each band. This bias minimizes second- and third-order distortion and conversion loss. The analyzer stores the bias values in EEROM.

A10 YTF (HP 8562A)

The YTF is a tracking preselector. It performs as a tunable bandpass filter for high band signals. Coarse frequency control originates from slope and offset DACs located on the A14 Frequency Control Assembly. (Slope and offset DAC values are loaded into EEROM for each of the four high bands.)

Fine frequency control originates from a preselector peak DAC located on the A3 Interface Assembly. Values for the preselector peak DAC are interpolated approximately every 17 MHz based upon data taken during the Frequency Response (Flatness) Adjustment.

The preselector's bandwidth varies from 25 MHz, at 2.75 GHz, to approximately 40 MHz, at 22 GHz.

AT1 (HP 8562B)

In HP 8562Bs, ATI is substituted for the A10 YTF. AT1 simulates the insertion loss of the A10 YTF. This simplifies operation of the IF gains, since some of the IF gains are used to compensate for band-to-band conversion loss.

A13 Second Converter

In low band, the A13 Second Converter down-converts the 3.9107 GHz 1st IF to a 310.7 MHz 2nd IF. In high band, it passes the 310.7 MHz 1st IF from the A8 Dual Mixer to the A15 RF Assembly. The converter generates a 3.6 GHz second LO by multiplying a 600 MHz reference. Bandpass filters remove unwanted harmonics of the 600 MHz driving signal. First IF and 2nd LO signals are filtered by cavity filters.

A15A1 Second IF Distribution Amplifier (P/O A15)

The A15A1 SIFA (Second IF Distribution Amplifier) amplifies and filters the second IF. (Option 001 instruments provide the pre-filtered signal at the rear-panel's SECOND IF OUTPUT.) Factory select attenuator A15U802 ensures that the gain provided by the SIFA is 12 dB ±2 dB.

The external mixing input from the front-panel's IF INPUT connector is also directed through the SIFA. A dc bias is placed onto the IF INPUT line for biasing external mixers.

Third Converter (P/O A15)

The third converter down-converts the IF to 10.7 MHz. A PIN-diode switch selects the LO signal used. For normal operation, a 300 MHz LO signal is used. The signal is derived from the Reference PLL. During signal identification (SIG ID ON), the 298 MHz SIG ID Oscillator is fed to the double balanced mixer on alternate sweeps.

Flatness Compensation Amplifiers (P/O A15)

The flatness compensation amplifiers amplify the output of the double-balanced mixer. The amplifier's variable gain (8 to 32 dB) compensates for flatness variations within a band. Band conversion loss is compensated by step gain amplifiers in the IF Section.

Control for the amplifiers originate from two DACs on the A3 Interface assembly. (DACs eliminate the need for potentiometers. DAC values are interpolated approximately every 17 MHz based on data obtained during the Frequency Response Adjustment.) A15's flatness-compensation control circuitry converts the RF GAIN voltage, from A3, into two currents: RF GAIN1 and RF GAIN2. These currents drive PIN diodes in the flatness compensation amplifiers.

Synthesizer Section

The first LO is phase-locked to the instrument's internal 10 MHz standard by four PLLs. See Figure 7-4.

The Reference PLL supplies reference frequencies for the instrument. The three remaining PLLs tune and phase-lock the LO through its frequency range. To tune the LO to a particular frequency, the instrument's controller must set the programmable feedback dividers (N) and reference dividers (R) contained in each PLL.

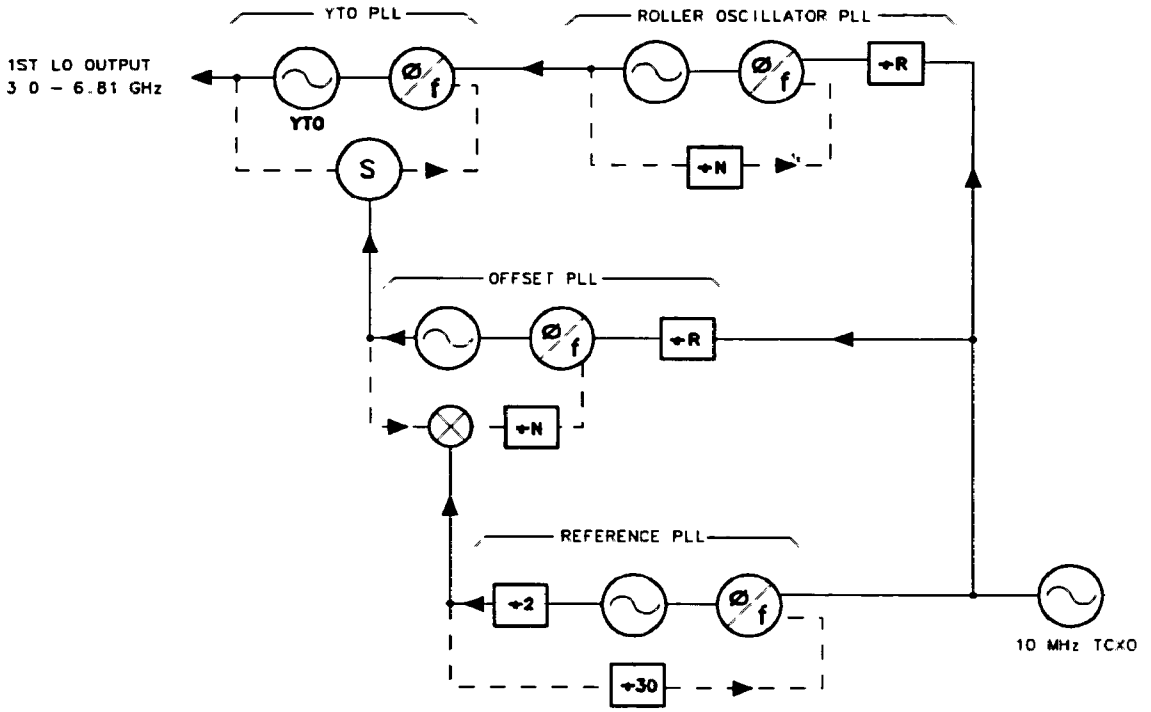

Figure 7-4. Phase Lock Loops

Sweeping the First LO

The analyzer uses a method called Lock and Roll to sweep the first LO (A11 YTO). This applies to all frequency spans and involves phase-locking the analyzer at the start frequency during the retrace of the sweep. The sweep ramp, generated on the A14 Frequency Control Assembly, is applied to either A11 YTO's main coil, A11 YTO's FM coil, Roller Oscillator

PLL's Main Oscillator, or Roller Oscillator PLL's Offset Oscillator. The frequency/span relationships are as follows:

A11 YTO Spanwidth	Sweep Applied To:
20.1 MHz to 3.8107 GHz	A11 YTO's main coil
1.01 MHz to 20.0 MHz	A11 YTO's FM coil
100 kHz to 1 MHz	Roller Oscillator PLL's Main Oscillator
10 kHz to 100 kHz	Roller Oscillator PLL's Offset Oscillator

When the sweep ramp is applied to one of the PLLs, the analyzer must prevent this loop from trying to compensate for changes in the output frequency. To accomplish this, the analyzer breaks the PLL by switching the output of the PLL's phase detector to ground.

Reference PLL (P/O A15)

The 600 MHz reference PLL provides the 600 MHz second LO, 300 MHz for the third LO, and reference for the Sampling Oscillator. The PLL is locked to a 10 MHz TCXO (temperature-compensated crystal oscillator). (The PLL can also be locked to an external frequency reference.) The TCXO also supplies the reference for the Roller Oscillators, the frequency counter on the A2 Controller Assembly, and the A16 Cal Oscillator Assembly.

YTO PLL (A7, A11, P/O A14, P/O A15)

The YTO PLL's oscillator produces the instrument's first LO (3.0 to 6.81 GHz). The oscillator's output is sampled by the output of the Offset PLL (Sampling Oscillator), and the resulting frequency is phase-locked to the output of the Roller Oscillator PLL.

The A15A2 Sampler mixes the LO signal from the A7 LODA with a harmonic of the Offset PLL's oscillator. The mixing product, the Sampler IF, is between 63 and 105.5 MHz (same frequency range as the Roller Oscillator PLL).

Offset PLL (P/O A15)

The 280 MHz to 298 MHz output of the Offset PLL is used to sample the YTO PLL's feedback path. By changing the values placed in the Offset loops programmable dividers, the YTO frequency can be changed.

Roller Oscillator PLL (P/O A14)

This PLL's output serves as the reference frequency for the YTO PLL. A one-to-one relationship in frequency tracking exists between the Roller Oscillator PLL and the YTO. (A change of 1 MHz in the Roller Oscillator PLL will produce a 1 MHz change in the YTO frequency.)

The Roller Oscillator PLL actually contains three PLLs that collectively produce an output of 63 MHz to 105.5 MHz. The three PLLs are the Main Roller PLL, Offset Roller PLL, and Transfer Roller PLL.

The Offset Roller PLL tunes from 189 MHz to 204 MHz. Because the output of the PLL is divided by 100, a one-hundred-to-one relationship exists between frequency changes in the Offset Roller PLL and the YTO. The Offset Roller PLL can be synthesized in 2.5 kHz steps, yielding an effective frequency resolution on the YTO of 25 Hz.

The Transfer Roller PLL tunes from 61 MHz to 103.5 MHz in 50 kHz steps.

A7 LODA

The A7 LODA (LO Distribution Amplifier) distributes the first LO to three locations: the front-panel 1ST LO OUTPUT connector, the A8 Dual Mixer, and A15A2 Sampler.

A11 YTO

A11 is a YTO (YIG-Tuned Oscillator). YIG (yttrium-iron-garnet) is a ferro-magnetic material which is polished into a small sphere and precisely oriented in a magnetic field. Changes in this magnetic field alter the frequency generated by the YTO. Current control of the magnetic field surrounding the YIG sphere tunes the oscillator to the desired frequency.

IF Section

The IF Section processes the 10.7 MHz output of the RF Section and sends the detected video to the ADC/Interface Section. The following major assemblies are included in this section:

A3 Interface Assembly
A4 Log Amplifier Assembly
A5 IF Assembly
A16 Calibration Oscillator Assembly

The HP 8562 uses trace-data manipulation to generate the 5 dB/DIV scale from the 10 dB/DIV scale. The A3 Interface Assembly amplifies and offsets the 10 dB/DIV video to generate the 2 dB/DIV scale. The 1 dB/DIV scale is generated from the 2 dB/DIV scale through trace data manipulation.

The first 50 dB of IF gain (log and linear mode) is achieved using the A5 assembly's linear step-gain amplifiers. The A4 assembly's video-offset circuit provides the remaining 60 dB of log mode IF gain and the assembly's linear amplifiers 40 dB of linear mode gain. In Bands 2, 3 and 4, some of the IF gain in the A5 IF Assembly is used to compensate for conversion loss in the RF section. This results in a reduced reference level range in Bands 2, 3, and 4. IF gain steps of less than 10 dB (regardless of the reference level) are accomplished on the A5 assembly.

A4 LOG Amplifier Assembly

The A4 Log Amplifier has separate log and linear amplifier paths. After log or linear amplification the signal path consists of a Detector, Buffer Amplifier, Video Offset, and Video Buffer Amplifier. Other auxiliary functions include the Frequency Counter Prescaler/Conditioner and the AM/FM Demodulator.

A5 IF Assembly

The A5 IF Assembly has four crystal filter poles, four LC filter poles, and step gain amplifiers. The crystal filters provide resolution bandwidths of 100 Hz to 10 kHz. The LC filters provide resolution bandwidths of 30 kHz to 2 MHz. All filter stages are in series. PIN diode switches bypass unwanted stages.

An Automatic IF Adjustment, in analyzer firmware, sets center frequency and 3 dB bandwidth of all filter poles through varactor and PIN diodes. The firmware also controls crystal-pole symmetry and the step gain amplification.

A16 Cal Oscillator

The A16 Cal Oscillator supplies the stimulus signal for Automatic IF adjustments. Normally, the oscillator operates only during retrace (for a few milliseconds) to adjust part of the IF. (All IF parameters will be re-adjusted approximately every five minutes.) With continuous IF adjust ON, a group of IF parameters are adjusted during each retrace period (non-disruptive). If continuous IF adjust is OFF, the most recent IF calibration data will be used.

The IF parameters adjusted include step gains, log amplifier gain and offset, bandwidth centering, 3 dB bandwidth, bandwidth amplitude, and crystal-filter symmetry.

A16's output has three forms (all −35 dBm):

- 10.7 MHz
- 9.9 to 11.5 MHz in 100 kHz steps
- Frequency sweeps from 20 kHz to 700 Hz centered at 10.7 MHz (lasting 5 to 60 ms respectively)

The purpose of these signals is:

- Adjust gains, log amps, and video slopes and offsets
- Adjust 3 dB bandwidth and center frequencies of LC resolution BW filters (30 kHz through 1 MHz).
- Adjust 3 dB bandwidth, symmetry, and gain of the crystal resolution BW filters (100 Hz through 10 kHz).

The Low Pass Filter is illustrated in Function Block D. The Low Pass Filter filters the square wave output of the variable gain amplifier so that harmonics do not subtly degrade the performance of the IF ADJUST process.

ADC/Interface Section

The ADC/Interface Section is the link between the Controller Section and the rest of the spectrum analyzer. It controls the RF, Synthesizer, and IF sections through address and data lines on the W2 Control Cable (Analog Bus). Analog signals from these sections are monitored by the ADC/Interface Section's ADC (Analog to Digital Converter) circuit.

The ADC/Interface section includes the A3 Interface Assembly, A1A1 Keyboard, and A1A2 RPG (front-panel knob). The A3 assembly includes log expand, video filter, peak detector, track-and-hold, real-time DACs, RF gain DACs, +10 V reference, and ADC circuitry. The assembly's digital section includes ADC ASM, trigger, keyboard interface, RPG interface, and analog bus interface circuitry.

ADC

The HP 8562 uses a successive-approximation type of ADC. The ADC Algorithmic State Machine (ADC ASM) controls the interface between the Start/Stop Control and the ADC itself, switching between positive and negative peak detectors when the NORMAL ("rosenfell") detector mode is selected, and switching the Ramp Counter into the ADC for comparison to the analog sweep ramp.

Log Expand/Video Functions (P/O A3)

The A3 Interface assembly performs log expand and offset functions. The Log Expand/Log Offset Amplifier provides a 2 dB/Div log scale. The 5 dB/Div scale is derived by multiplying

the digitized 10 dB/Div trace data by two in the CPU. The 1 dB/Div scale is similarly derived by multiplying the 2 dB/Div trace data by two.

The analyzer uses two types of video filters. An RC low-pass circuit provides 300 Hz to 3 MHz video bandwidths. Video bandwidths of 1 Hz to 100 Hz are filtered digitally by the CPU. When a digital filter is selected, a "D" appears along the left edge of the CRT, indicating that something other than the normal detector mode is being used. Digitally filtered bandwidths use a sample detector.

After filtering, the video is sent to the Positive and Negative Peak Detectors. These detectors are designed for optimum pulse response. The Positive Peak Detector resets at the end of each horizontal "bucket" (there are 601 such buckets across the screen). The Negative Peak Detector resets at the end of every other bucket. When reset, the output of the peak detector equals its input.

Triggering

The HP 8562 has five trigger modes: free run, single, external, video, and line. The Free Run and Single trigger signal comes from the 1 MHz ADC clock. The line trigger signal comes from the A6 Power Supply. Video triggering originates from A3's video filter buffer circuit. External triggering requires a TTL logic high level received from a rear-panel BNC connector. A DAC in the trigger circuit sets the video trigger level. The trigger circuit is responsible for setting HSCAN high.

Controller Section

The Controller Section includes the A2 Controller Assembly and A19 HP-IB Assembly. The A2 assembly controls the A16 Cal Oscillator and A17 CRT driver through W7. The battery on the rear panel provides battery-backup for STATE and TRACE storage.

The A2 contains the CPU, RAM, ROM, the Display ASM and Line Generators, CRT blanking, focus, intensity control, HP-IB Interface, Frequency Counter, Display RAM, Option Module interface, and EEROM. The A19 HP-IB is a mechanical interface between the standard HP-IB connector and the ribbon cable connector on the A2 Controller Assembly.

Four of the eight RAM IC's are battery-backed. The battery-backed RAM stores trace information (two Display Memory RAMs) and analyzer state information (two program RAMs). A total of eight traces and ten states may be stored. Typical battery life is ten years with the lithium battery and two years with the optional silver-oxide battery. Trace and state information may be retained for up to 30 minutes with a dead battery and power turned off. This is due to the RAM's very low data retention current.

EEROM

The EEROM stores important amplitude-related correction data. This includes data for mixer-bias DACs, YTF Slope and Offset DACs, RF Gain DACs (flatness correction), and a Preselector Peak DAC. The analyzer serial number, model number, and installed options are also stored in EEROM.

Firmware

The analyzer firmware reads the model number and installed options from the EEROM to determine how to respond to certain keystrokes. For example, if the model number is "HP 8562B", pressing (INT) will not result in softkeys for peaking the preselector, since a

preselector is not present. Similarly, if Option 026 is installed, pressing (PRESET) will set the stop frequency to 26.5 GHz (it will be set to 22 GHz in standard HP 8562A's).

Much of the miscellaneous digital control is performed by A2U100. U100 functions as the display ASM (Algorithmic State Machine) and character ROM. It also converts the 16 bit CPU data bus to an 8-bit data bus for the rest of the analyzer.

Display/Power Supply Section

A6 Power Supply

The A6 Power Supply is a switching supply operating at 40 kHz for the low voltages and 30 kHz for the CRT supplies (cathode, filament, +110 V dc, and post accelerator). A6A1 High Voltage Module contains the high-voltage transformer and post-accelerator multiplier. Power is distributed through W8 to A17 and through W1 to the rest of the assemblies. A6A1W2 supplies CRT cathode and filament voltages to the A17 assembly.

The speed of the analyzer's fan is variable. A thermistor on A6 senses the temperature and adjusts the fan speed accordingly. This allows the analyzer to run quietly in most room-temperature environments and faster (louder) only when necessary.

A17 CRT Display Driver

The A2 assembly's Line Generators drive the A17 CRT Driver. The A17 assembly contains X and Y Deflection Amplifiers, focus and intensity grid amplifiers, and miscellaneous CRT bias circuitry. The high voltage is supplied by A6A1 High Voltage Module.

In fast-analog zero-span mode (sweep times $\leq$30 ms), the 0-SPAN VIDEO signal from A3 and the sweep ramp from A14 goes to the A17 CRT Driver. The graticule and annotation is still digitally drawn.

8562A/B SIMPLIFIED BLOCK DIAGRAM

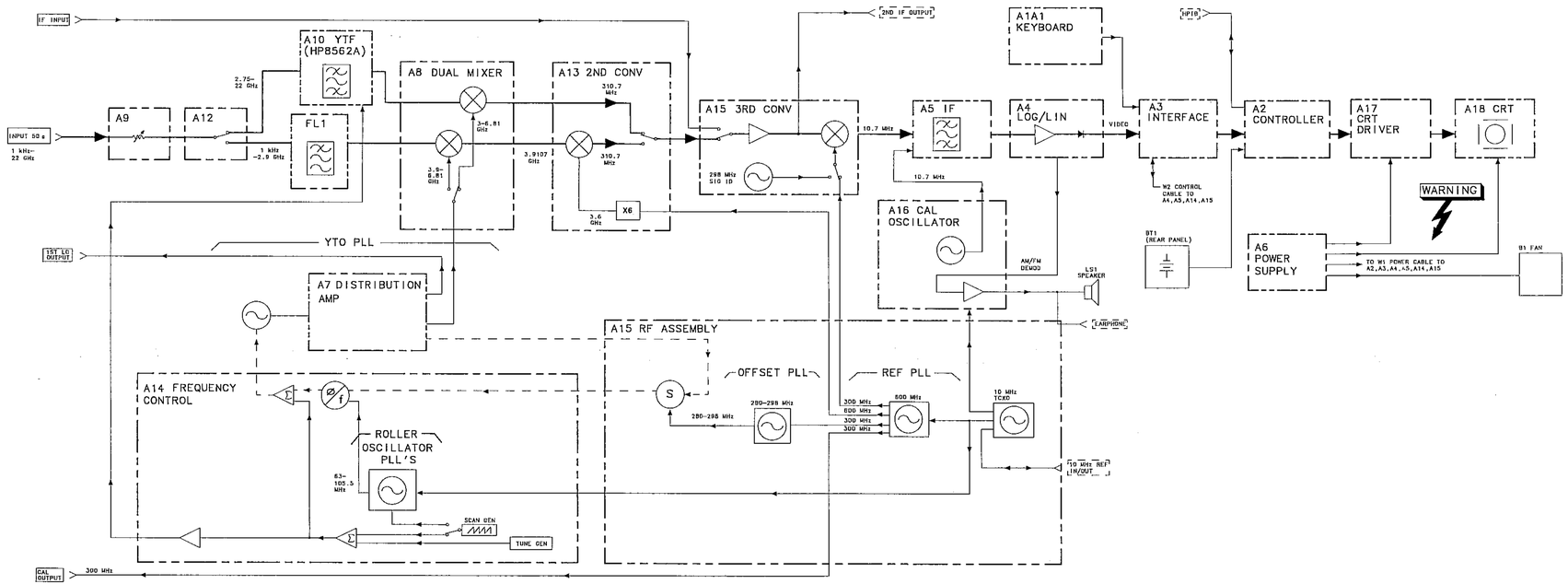

FIGURE 7-5. SIMPLIFIED BLOCK DIAGRAM

8562A/3 OVERALL BLOCK DIAGRAM
(SHEET 1 OF 3)

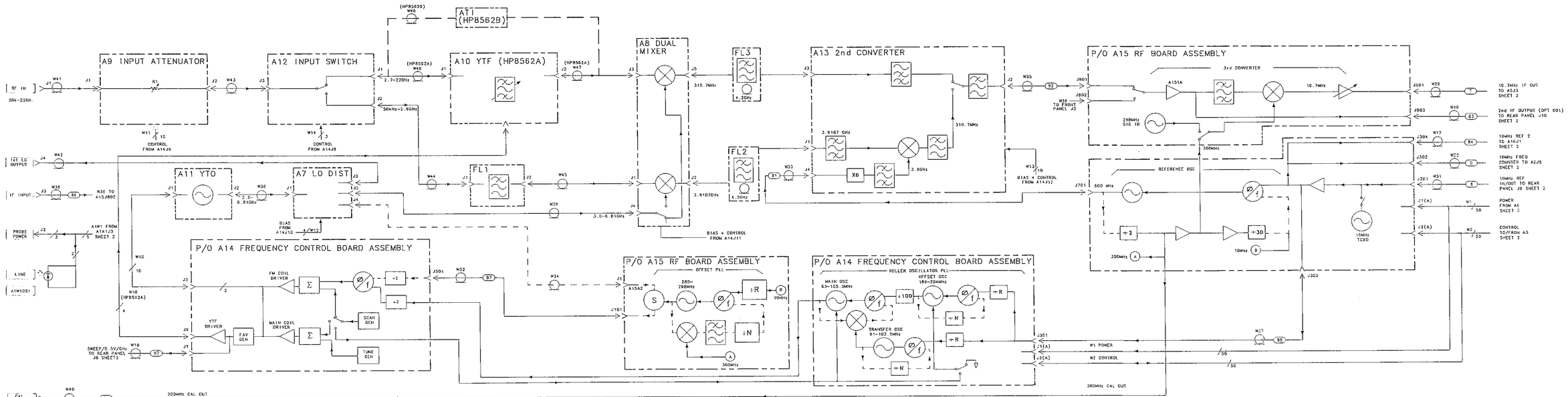

FIGURE 7-6. HP MODEL 8562A/B OVERALL BLOCK DIAGRAM (SHEET 1 OF 3)

8562A/B OVERALL BLOCK DIAGRAM
(SHEET 2 OF 3)

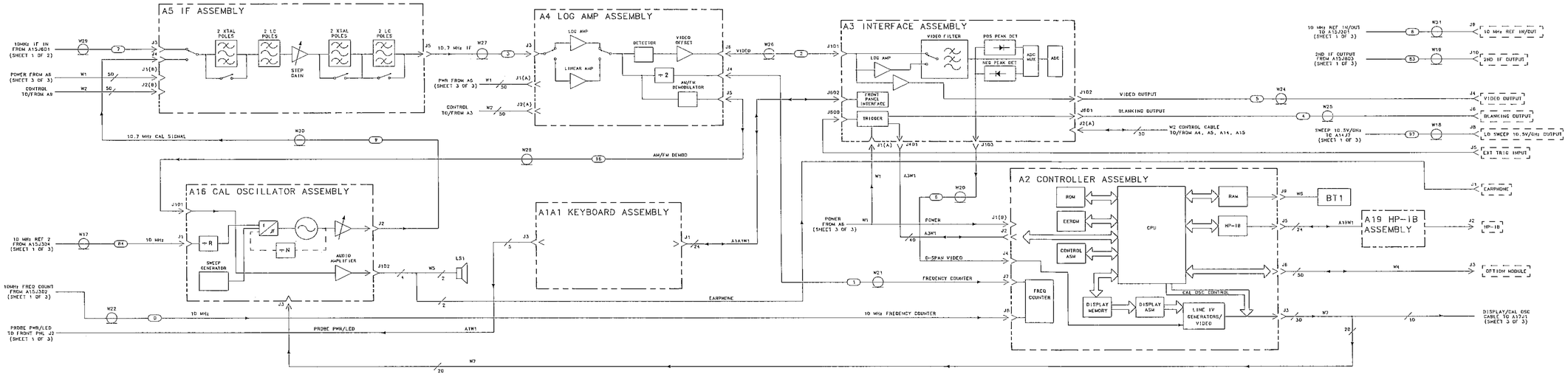

FIGURE 7-6. OVERALL BLOCK DIAGRAM (SHEET 2 OF 3)

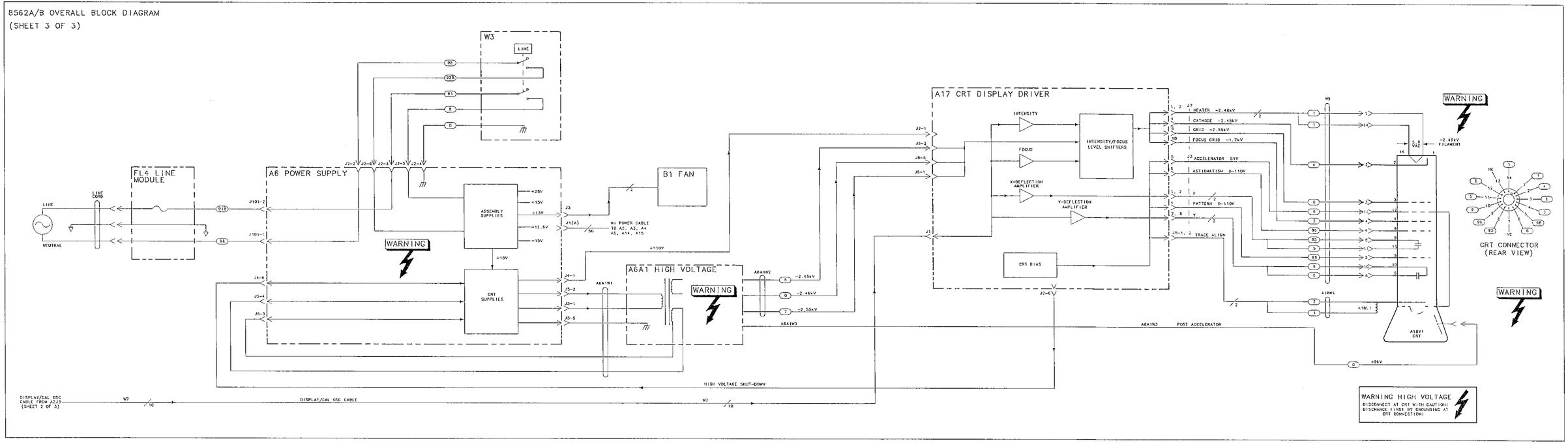

FIGURE 7-6. HP MODEL 8562A/B OVERALL BLOCK DIAGRAM (SHEET 3 OF 3)

8

ADC/Interface Section

The ADC/Interface Section includes the A1A1 Keyboard, A1A2 RPG (rotary pulse generator), and A3 Interface assemblies. Table 8-1 lists signal versus pin numbers for control cable W2. For schematics, component locations, and replaceable parts for these boards, see the *HP 8562A/B Component-Level Information* manual.

	Page
Troubleshooting Using the TAM	8-4
Automatic Fault Isolation	8-4
Keyboard/RPG Problems	8-7
Keyboard Interface	8-7
RPG Interface	8-8
Triggering Problems	8-10
Preselector Peaking Control (Real Time DAC)	8-11
Band Flatness Control (RF GAIN DAC)	8-12
A3 Assembly's Video Circuits	8-13
Log Offset/Log Expand	8-14
Video MUX	8-15
Video Filter	8-16
Video Filter Buffer Amplifier	8-17
Positive/Negative Peak Detectors	8-17
Peak Detector Reset	8-18
Rosenfell Detector	8-19
ADC MUX	8-20
Variable Gain Amplifier (VGA)	8-21
Track and Hold	8-21
A3 Assembly's ADC Circuits	8-22
ADC Control Signals	8-22
ADC Start/Stop Control	8-23
ADC ASM	8-24
ADC	8-24
Ramp Counter	8-25
A3 Assembly's Control Circuits	8-26
Analog Bus Drivers	8-26
Analog Bus Timing	8-27
Interface Strobe Select	8-28

Table 8-1. W2 Control Cable Connections (1 of 2)

Signal	A3J2 (pins)	A4J2 (pins)	A5J2 (pins)	A14J2 (pins)	A15J2 (pins)
D0	1*	1	50	1	1
D GND	2*	2	49	2	2
D1	3*	3	48	3	3
D2	4*	4	47	4	4
D3	5*	5	46	5	5
D4	6*	6	45	6	6
D GND	7*	7	44	7	7
D5	8*	8	43	8	8
D6	9*	9	42	9	9
D7	10*	10	41	10	10
A0	11*	11	40	11	11
D GND	12*	12	39	12	12
A1	13*	—	38	13	13
A2	14*	—	37	14	14
A3	15*	15	36	15	15
A4	16*	—	35	16	16
D GND	17*	17	34	17	17
A5	18*	—	33	18	—
A6	19*	—	32	—	—
A7	20*	—	31	20	—
D GND	21*	21	30	21	21
LRF_STB	22*	—	—	—	22
LFC_STB	23*	—	—	23	—
LIF_STB	24*	—	27	—	—
NC	—	—	—	—	—
LLOG_STB	26*	26	—	—	—
VCMON	—	—	—	27	—
D GND	28*	28	23	28	28
RT PULSE	29*	—	—	—	—
HSCAN	30*	—	—	30	—
D GND	31*	31	20	31	31
RESERVED	—	—	—	—	—
OFL ERR	33	—	—	—	33*
R/T DAC3	34*	—	—	—	—
A GND	35*	35	16	35	35
RF GAIN	36*	—	—	—	36
LO3 ERR	—	—	—	37	37*
A GND	38*	38	13	38	38
LVFC_ENABLE	39*	—	—	39	—
FC ERR	40	—	—	40*	—
A GND	41*	41	10	41	41
YTO ERR	42	—	—	42*	—
+10 V REF	43*	43	—	—	43

* indicates signal source connectors.

Table 8-1. W2 Control Cable Connections (2 of 2)

Signal	A3J2 (pins)	A4J2 (pins)	A5J2 (pins)	A14J2 (pins)	A15J2 (pins)
A GND	44*	44	7	44	44
SCAN RAMP	45	—	—	45*	—
VIDEO TRIGGER	46*	—	—	—	—
A GND	47*	47	4	47	47
NC	—	—	—	—	—
R/T DAC2	49*	—	—	—	—
R/T DAC1	50*	—	—	50	—

* indicates signal source connectors

Troubleshooting Using the TAM

When using Automatic Fault Isolation, the TAM indicates suspected circuits that need to be manually checked. Use Table 8-2 to locate the manual procedure.

Table 8-3 lists assembly test connectors associated with each Manual Probe Troubleshooting test. Figure 8-1 illustrates the location of A3's test connectors.

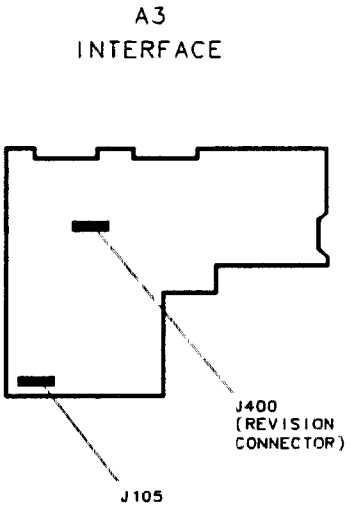

Figure 8-1. A3 Test Connectors

Automatic Fault Isolation

Analog data bus errors that occur during Automatic Fault Isolation result from either a shorted W2 control cable or faulty A3 assembly. Perform the following steps to determine the cause of the error.

1. Disconnect W2 from A3J2 and repeat the Automatic Fault Isolation procedure.
2. If the analog data bus error is still present, troubleshoot the A3 Interface assembly. If the error disappears, look for a short on W2 or another assembly connecting to it.
3. To isolate a short on W2, reconnect W2 to A3J2 and disconnect W2 from all other assemblies.
4. Repeat the Automatic Fault Isolation routine.
5. If the analog data bus error is still present, W2 is shorted. If the error disappears, reconnect the other assemblies one at a time and repeat the procedure. Once the faulty assembly is reconnected to W2, the error should reappear.

Table 8-2. Automatic Fault Isolation References

Suspected Circuit Indicated by Automatic Fault Isolation	Manual Procedure to Perform
Check ADC ASM	ADC ASM
Check ADC MUX	ADC MUX
Check ADC Start/Stop Control	ADC Start/Stop Control
Check Analog Bus Drivers	Automatic Fault Isolation *(in this chapter)* Analog Bus Drivers
Check Analog Bus Timing	Automatic Fault Isolation *(in this chapter)* Analog Bus Timing
Check Interface Strobe Select	Interface Strobe Select
Check Keyboard Interface	Keyboard/RPG Problems
Check Negative Peak Detector	Positive/Negative Peak Detectors *(steps 3 through 10)*
Check Peak Detector Reset	Peak Detector Reset
Check Positive Peak Detector	Positive/Negative Peak Detectors *(steps 3 through 10)*
Check Ramp Counter	Ramp Counter
Check Real Time DAC	Preselector Peaking Control (Real Time DAC)
Check RF Gain DACs	Band Flatness Control (RF Gain DACs)
Check Rosenfell Detector	Rosenfell Detector
Check RPG Interface	Keyboard/RPG Problems
Check Track and Hold	Track and Hold
Check Trigger	Triggering Problems
Check Variable Gain Amplifier (VGA)	Variable Gain Amplifier (VGA)
Check Video Filter	Video Filter
Check Video Filter Buffer Amplifier	Video Filter Buffer Amplifier
Check Video MUX	Video MUX

Table 8-3. TAM Tests Versus A3 Test Connectors

Connector	Manual Probe Troubleshooting Test	Measured Signal Lines
A3J105	Video Input to Interface	MS1
	Video to Rear Panel	MS2
	Video MUX	MS3
	LOG Offset/LOG Expand	MS1, MS3
	Video Filter Buffer Amp.	MS3, MS5, OS1
	Video Peak Detectors	MS5, MS6
	ADC MUX	MS6
	Variable Gain Amplifier	MS6, MS7
	Track and Hold	MS7, MS8
A3J400	Revision	MS2
	Trigger	MS8
	ADC Start/Stop Control	MS7
	Video Trigger DAC	MS1
	Real Time DAC #1	MS3
	RF Gain DACs	MS6

Keyboard/RPG Problems

Keyboard Interface

See function block G of A3 Interface Assembly Schematic Diagram (sheet 3 of 6).

A pressed key results in a low on a keyboard sense line (LKSNS0 through LKSNS7). This sets the output of NAND gate U607 high, generating KBD_IRQ. The CPU determines the key pressed by setting only one keyboard scan line (LKSCN0 through LKSCN5) low through U602 and reading the keyboard sense lines.

1. If none of the keys or RPG responds, check ribbon cable, A1A1W1. (This cable connects the A1A1 Keyboard to the A3 Interface Assembly.) The keys are arranged in a row/column matrix, as shown in Table 8-4.
2. If an entire row or column of keys does not respond, and the RPG does respond, there might be an open or shorted wire in A1A1W1.

Table 8-4. Keyboard Matrix

	LKSNS0	LKSNS1	LKSNS2	LKSNS3	LKSNS4	LKSNS5	LKSNS6	LKSNS7
LKSCN0	DEMOD	SAVE	RECALL	GHz	MHz	kHz	Hz	PRESET
LKSCN1	FREQ COUNTER	TRIG	DISP	9	6	3	BK SP	⇑
LKSCN2	PEAK SEARCH	BW	TRACE	8	5	2	•	⇓
LKSCN3	MKR OFF	AUTO COUPLE	MKR⇒	7	4	1	0	HOLD
LKSCN4	SWEEP	SK1	SK2	SK3	SK4	SK5	SK6	MKR ON
LKSCN5	INT	EXT	MODULE	•	°	FRE-QUENCY	SPAN	AMPLI-TUDE

3. Check that all inputs to NAND gate A3U607 (LKSNS lines) are high when no key is pressed. If any input is low, continue with the following:
   a. Disconnect A1A1W1 from A3J602 and again check all inputs to U607.
   b. If any input is low with A1A1W1 disconnected, suspect A3U604 or A3U607.
   c. Reconnect A1A1W1 to A3J602.
4. Monitor A3U607 pin 8 with a logic probe. A TTL high should be present when any key is held down. Monitor this point while pressing each key in succession.
5. Check that the LKSCN lines (outputs of A3J602 pins 1 through 6) read a TTL low with no key pressed. (Any TTL high indicates a faulty A3 Interface assembly.)
6. Check that a pulse is present at each LKSCN output of U602 when a key is pressed.
7. Check that only one input to U607 (LKSNS lines) goes low when a key is pressed.
8. Check that U602 pin 9 (LKBD_RESET) pulses low when a key is pressed.
9. If LKBD_RESET is incorrect and a pulse is not present at each of the LKSCN outputs of U602 when a key is pressed, check for LWRCLK and LSCAN_KBD.

RPG Interface

See function block J of A3 Interface Assembly Schematic Diagram (sheet 2 of 6).

U608B latches the RPG direction from the two RPG outputs, RPG_01 and RPG_02. Counterclockwise RPG rotation produces low-going pulses which result in a high output on U608B. Clockwise RPG rotation results in a low output from U608B. U612A provides the edge to trigger one-shot U423B, which generates a 90 ms pulse. This pulse gates U610A for counting of RPG pulses by U606. Gates U610D and U614D prevent retriggering of U423B until its 90 ms pulse has timed out.

1. Monitor A3U401 pin 2 with a logic probe or oscilloscope. Pulses should be present as the RPG is rotated.
2. Monitor A3U608 pin 12 as the RPG is rotated. Pulses should be present.
3. If pulses are missing at both points, check for power and ground signals to A1A1W1 and A1A2W1. If both power and ground are there, the A1A2 RPG is probably defective.
4. If pulses are missing at only one point, check for an open or short on A1A1W1 and A1A2W1. If these cables are working properly, A1A2 RPG is probably defective.
5. Set the LINE switch OFF and disconnect A1A1W1 from A3J602. Jumper A3U608 pin 12 (RPG_01) to U608 pin 14 (+5 V dc). Jumper U401 pin 2 (RPG_02) to U511 pin 11 (HDPKD_CLK). This provides a 7.8 kHz square wave to the RPG_02 input of the RPG Interface.
6. Check A3U608 pin 9 for narrow, low-going pulses approximately every 90 ms.
7. Check A3U608 pin 13 (LRPG_RESET) for narrow, low-going pulses approximately every 90 ms.
8. Check A3U612 pin 5 for narrow, low-going pulses approximately every 90 ms.
9. Check U608 pin 5 (HRPG_IRQ) for narrow, high-going pulses approximately every 90 ms.
10. If HRPG_IRQ is correct but LRPG_RESET is incorrect, check U505 pin 13 (LKBD/RPG_IRQ) for narrow, low-going pulses approximately every 90 ms.
11. If HRPG_IRQ and LKBD/RPG_IRQ are correct but LRPG_RESET is incorrect, suspect a failure on the A2 Controller Assembly.
12. Check U610 pin 3 for a 7.8 kHz square wave. Check U606 pin 2 (HRPG_RESET) for narrow, high-going pulses approximately every 90 ms. Refer to Table 8-5 and check the frequencies at divide-by-16 counter A3U606.
13. If all the checks above are correct but the analyzer does not respond to the RPG, suspect a problem in either the A1A2 RPG or the A1A1 Keyboard.
14. Reconnect A1A1W1 to A3J602 and remove all jumpers.

Table 8-5. Counter Frequencies

A3U606 pin #	Nominal Frequency (Hz)
3	3900
4	1950
5	975
6	488
11	244
10	122
9	61

Triggering Problems

See function block H of A3 Interface Assembly Schematic Diagram (sheet 2 of 6).

The ADC clock provides synchronization in FREE RUN and SINGLE triggering. LINE triggering synchronization originates on the A6 Power Supply. Trigger MUX A3U613A selects between FREE RUN, VIDEO, LINE, and EXTERNAL trigger sources. The trigger signal sets the output of the HSCAN latch high. HBADC_CLK0 provides the trigger signal for FREE RUN. The VIDEO TRIG signal must be at least 25 mV (0.25 divisions) peak-to-peak to trigger in video trigger mode.

1. Check that the trigger MUX is receiving the proper trigger source information by selecting each of the following trigger modes and checking the TRIG_SOURCE0 and TRIG_SOURCE1 lines as indicated in Table 8-6 below.
2. If a trigger mode does not work, check that a trigger signal is present at the appropriate MUX input, as indicated in Table 8-6.

Table 8-6. Trigger MUX Truth Table

Trigger Mode	TRIG_SOURCE0 U613 pin 14	TRIG_SOURCE1 U613 pin 2	MUX Input Pin Number
FREE RUN	L	L	6
VIDEO	H	L	5
LINE	H	H	3
EXTERNAL	L	H	4

3. Check that the appropriate MUX input signal is present at the MUX output (A3U613 pin 7).
4. To check the video trigger level DAC, connect a DVM's positive lead to A3J400 pin 1 and the negative DVM lead to A3TP4.
5. Press (TRIG) and VIDEO.
6. Press the STEP (▼) key several times while noting the DVM reading and position of the video trigger level on the screen.
7. Check that the voltage displayed on the DVM increases by 1 V for each step of the VIDEO TRIG LEVEL.
8. If the voltage changes incorrectly, proceed as follows:
   a. Check the −10 V dc reference (A3U409 pin 4).
   b. While using the front-panel knob to adjust the video trigger level, check for the presence of pulses on A3U409 pin 15 (LDAC2).
   c. While using the front-panel knob to adjust the video trigger level, check for the presence of pulses on A3U409 pin 16 (LWRCLK).
   d. Check that pulses are present on U409 pin 6 (IA0).
9. If the LWRCLK and LDAC2 signals are not correct, refer to "Interface Strobe Select."

Preselector Peaking Control (Real Time DAC)

See function block L of A3 Interface Assembly Schematic Diagram (sheet 4 of 6).

The HP 8562A uses a real-time DAC (R/T DAC1) to peak the preselector. No real-time DACs are used in the HP 8562B.

1. Press (PRESET) on the HP 8562A and set the (SPAN) to 0 Hz.
2. Connect a positive DVM lead to A3J400 pin 3 and the negative DVM lead to A3TP4.
3. Press MARKER (ON), (INT), and **PRESEL MAN ADJ**.
4. Monitor the DVM reading while changing the PRESELECTOR TUNE value from 0 to 255. The PRESELECTOR TUNE value is R/T DAC1's setting.
5. Check that the DVM reading increases from 0 to approximately +10 V dc as R/T DAC1 is set from 0 to 255.
6. If the voltage does not change as described, set the analyzer to **SINGLE** trigger mode and check the following:
   a. Check that A3U409B pin 18 is at −10 V dc.
   b. While using the front-panel knob to change the PRESELECTOR TUNE value, check for the presence of pulses at U409 pin 6 (IA0).
   c. Check that U409 pin 15 (LDAC2) is a TTL high.
   d. Check that pulses are present at U409 pin 16 (LWRCLK).
7. If the LDAC2 or LWRCLK signals are incorrect, refer to "Interface Strobe Select."

Band Flatness Control (RF Gain DACs)

See function block M of A3 Interface Assembly Schematic Diagram (sheet 4 of 6).

RF Gain DACs control the A15 assembly's flatness compensation amplifiers. The RF Gain DACs are arranged so that the output of one DAC is the voltage reference for the other DAC. This results in an RF GAIN voltage which is exponentially proportional to the DAC settings. Each DAC is set to the same value. The A15 RF Assembly converts the RF GAIN signal to a current for driving the PIN diode attenuators in the Flatness Compensation Amplifiers. The exponentially-varying voltage compensates for the nonlinear resistance-versus-current characteristic of the PIN diodes.

1. Place the WR PROT/WR ENA jumper on the A2 Controller Assembly in the WR ENA position.
2. Press (INT), FLATNESS DATA. Press NEXT BAND until "FLATNESS BAND # 0" is displayed.
3. Press the (▲) key until "DATA @ 300 MHz" is displayed. Note the number directly below "DATA @ 300 MHz"; this is the RF Gain DAC value.
4. Connect a positive DVM lead to A3J400 pin 13 and the negative DVM lead to A3TP4.
5. Check that the DVM reading increases from near 0 V dc to between +3.5 and +5.0 V dc as the RF Gain DAC setting is increased from 0 to 255.
6. If the DVM readings are incorrect, press (PRESET), (TRIG), SINGLE, (INT), and FLATNESS DATA. Press NEXT BAND until "FLATNESS BAND # 0" is displayed. Press the (▲) key until "DATA @ 300 MHz" is displayed. Proceed as follows:
   a. Check the +10 V reference.
   b. Check for pulses at A3U417 pin 16 (LWRCLK).
   c. While rotating the front-panel knob, check for pulses at A3U417 pin 15 (LDAC1).
   d. While rotating the front-panel knob, check for pulses at U417 pin 6 (IA0).
7. The LWRCLK and LDAC1 are incorrect, refer to the Interface Strobe Select block.
8. Place the WR PROT/ WR ENA jumper on the A2 Controller Assembly in the WR PROT position.

A3 Assembly's Video Circuits

Voltages from A3J101 to A3's Variable Gain Amplifier correspond to on-screen signal levels. (One volt corresponds to the top of the screen and zero volts corresponds to the bottom of the screen.) This is true for both log and linear settings except when the analyzer is in 1 dB/div or 2 dB/div. In these cases the log expand amplifier is selected, and 1 V corresponds to top-screen and 0.8 or 0.9 V corresponds to bottom-screen. The analyzer can be set to zero span at the peak of a signal to generate a constant dc voltage in the video circuits during sweeps.

1. Disconnect W26 from A3J101 and W20 from A2J4.
2. Connect W26 to A2J4.
3. Set the HP 8562A/B to the following settings:

   SPAN ..... 0 Hz
   SWEEP TIME ..... 20 ms
   RES BW ..... 1 MHz
   LOG/div ..... 10 dB/div

4. If a trace is displayed, troubleshoot the A3 assembly. If a trace is absent, connect an oscilloscope to the rear-panel BLANKING OUTPUT.
5. The presence of a TTL signal (TTL low during 20 ms sweep) indicates a good A3 Interface Assembly. Troubleshoot the IF Section.
6. If the BLANKING OUTPUT is always at a TTL high or low, troubleshoot the A3's trigger circuits.
7. Reconnect W26 to A3J101 and W20 to A2J4.
8. Remove the A3 assembly's shield.
9. If the video filters appear to be faulty, refer to "Video Filter" in this chapter.
10. If there appears to be a peak detector problem, refer to "Positive/Negative Peak Detectors" in this chapter.
11. Connect the HP 8562A/B's CAL OUTPUT to the INPUT 50Ω and set the controls as follows:

    CENTER FREQ ..... 300 MHz
    SPAN ..... 0 Hz
    REF LVL ..... −10 dBm

12. If the analyzer works correctly in 5 dB/div and 10 dB/div but not in 1 dB/div or 2 dB/div, refer to "Log Offset/Log Expand." Continue with step 13 if the problem involves on-screen amplitude errors which appear to originate in the video chain.
13. Monitor A3TP9 with an oscilloscope. If the voltage is not approximately +1 V dc, troubleshoot the A4 Log Amplifier. (Refer to Chapter 9 to troubleshoot the IF Section.)
14. To confirm proper video input to the video circuit, change the reference level in 10 dB steps from −10 dBm to +30 dBm. At each 10 dB step, the input voltage should change 100 mV. The input level should be +0.6 V dc for a +30 dBm reference level.

Note The on-screen amplitude level will probably not change as expected, since the video chain is assumed to be faulty.

15. Monitor A3TP14 while stepping the reference level from −10 dBm to +30 dBm. If the voltage does not step approximately 100 mV per 10 dB step, refer to "Video MUX" in this chapter.
16. If the Video MUX is working properly, monitor A3TP15 with the oscilloscope and step the reference level from −10 dBm to +30 dBm. If the voltage does not change 100 mV per 10 dB step, refer to "Video Filter" in this chapter.
17. If the voltage at A3TP15 is correct, move the oscilloscope probe to A3TP17 and step the reference level between −10 dBm and +30 dBm. If the voltage does not change 100 mV per 10 dB step, refer to "Video Filter Buffer Amplifier" in this chapter.
18. If the voltage at A3TP17 is correct, move the oscilloscope probe to A3TP6. Set the following controls to keep the ADC MUX set to the MOD_VIDEO input during the sweep.

    SWEEP TIME ..... 50 s
    DETECTOR MODE ..... SAMPLE

19. Step the reference level from −10 dBm to +30 dBm while monitoring the voltage change on the oscilloscope. If the voltage does not change 100 mV per 10 dB step, refer to "ADC MUX" in this chapter.
20. If the voltage at A3TP6 is correct, move the oscilloscope probe to A3TP8 and step the reference level between −10 dBm and +30 dBm. If the voltage at A3TP8 is not the same as that at A3TP6, replace A3U110.
21. If the voltage at A3TP8 and A3TP6 are equal, move the oscilloscope probe to A3TP7.
22. Change the reference level from −10 dBm to 0 dBm. The voltage change on A3TP7 should be between 670 mV and 730 mV. If the voltage change is outside of these limits, refer to "Variable Gain Amplifier (VGA)." The gain of the VGA should be 7 ±10%.

Log Offset/Log Expand

See function block X of A3 Interface Assembly Schematic Diagram (sheet 5 of 6).

The log scales are modified using a combination of amplification and digital trace manipulation. The video input to the A3 assembly is either 10 dB/div or linear. To obtain the 5 dB/div scale, the CPU manipulates the trace data from the 10 dB/div scale. To obtain the 2 dB/div scale, the video signal is amplified and offset so that top-screen in 10 dB/div corresponds to top-screen in 2 dB/div. To obtain the 1 dB/div scale, the CPU manipulates trace data from the 2 dB/div scale.

In 2 dB/div, Log Offset/Log Expand amplifies the top 20 dB of the display. This is done by offsetting the video signal by −0.8 V and providing a gain of 5 to the top 0.2 V of the video signal. The −0.8 V offset is accomplished by sinking 2 mA through R114 by current source U105/Q101.

1. On the HP 8562A/B press (PRESET), (SPAN), and ZERO SPAN .

2. Disconnect W26 (red) from A3J101 and connect the output of a function generator to A3J101.
3. Set the function generator to the following settings:

   Output ..... Sine wave
   Amplitude ..... 1 V pk-to-pk
   DC Offset ..... +500 mV
   Frequency ..... 50 Hz

4. Set the HP 8562A/B sweep time to 50 ms.
5. Adjust the function generator amplitude and offset until the sine wave fills the entire graticule area.
6. Measure and note the function generator's peak-to-peak voltage using an oscilloscope.

   $V_{(10\ dB/div)}$ = _____ V

7. Set the HP 8562A/B's [dB/DIV] to 2 dB.
8. Readjust the function generator amplitude and offset until the sine wave again fills the entire graticule area.
9. Measure the function generator's peak-to-peak voltage and dc offset.

   $V_{(2\ dB/div)}$ = _____ V

10. The ratio of voltage recorded in step 6 to the voltage recorded in step 9 should be 5 ±3%. If the ratio is not 5, troubleshoot the A3 Interface Assembly.

Video MUX

See function block U of A3 Interface Assembly Schematic Diagram (sheet 5 of 6).

The AUX VIDEO port and the 0 SPAN CAL function are not used. Both Q220 and Q219 should be off at all times.

1. Press (PRESET) and set the HP 8562A/B controls as follows.

   CENTER FREQ ..... 300 MHz
   SPAN ..... 0 Hz

2. Check for a TTL high on A3U104 pin 2 and a TTL low on U104 pins 7, 10, and 15. Set the analyzer to 2 dB/div and check for a TTL high on A3U104 pin 10 and a TTL low on A3U104 pins 2, 7, and 15.
3. If the logic levels on A3U104 are incorrect, check the LLOG_STB signal as follows:
   a. Monitor A3U104 pin 9 with an oscilloscope or logic probe. Check that a pulse is present when switching between 10 dB/div and 2 dB/div.
   b. Check the inputs to A3U104 (pins 4 and 12) while switching between 10 dB/div and 2 dB/div.
   c. If the logic signals are incorrect, refer to "Analog Bus Timing" and "Analog Bus Drivers."

4. Check comparators A3U109A/C/D for proper outputs. The outputs should be high when the noninverting input is greater than the threshold voltage of +2.4 V dc.
5. If A3U104 and A3U109 are working properly, set the **REF LEVEL** to 0 dBm.
6. Monitor the voltage at A3TP14 while switching the analyzer between 10 dB/div and 2 dB/div. The voltage should switch between 0.9 and 0.5 V dc.
7. If the voltage at A3TP14 is incorrect, suspect either A3Q220 or A3Q221.
8. The Video MUX will appear faulty if A3CR109 is shorted or leaky. Diode A3CR109 clamps the voltage at A3TP14 to −0.4 V when in log expand with less than 0.8 V at J101. To confirm this failure, lift diode A3CR109's cathode and perform steps 1 through 7 again.

Video Filter

See function block V of A3 Interface Assembly Schematic Diagram (sheet 5 of 6).

The HP 8562A/B uses digital filtering for 1 Hz to 100 Hz video bandwidths. An RC low-pass filter is used for 300 Hz to 3 MHz video bandwidths. Various series resistances and shunt capacitances switch into the video filter to change its cutoff frequency.

1. Set the HP 8562A/B controls to the following settings:

   START FREQ ..... −10 MHz
   STOP FREQ ..... 500 MHz
   SWEEP TIME ..... Uncoupled

2. Step the Video BW from 3 MHz to 10 kHz. At each step, the peak-to-peak deviation of the noise should decrease.
3. Step the Video BW down to 1 Hz. At each step, the amplitude of the LO feedthrough should decrease.
4. Refer to Table 8-7 and check for correct latch settings for the selected video bandwidth setting.
5. If latch A3U102's output is not correct, trigger an oscilloscope on LLOG_STB (U102 pin 9) and monitor U102 pin 1 and other latch inputs while changing the video bandwidth.
6. If the inputs are incorrect, troubleshoot the analog bus. Correct inputs with bad outputs indicate a faulty U102.
7. Check that the outputs of A3U111A, A3U111B, and A3U107A/B/C/D are correct for their inputs. The outputs should be high with noninverting inputs higher than the +1.4 V threshold voltage. If a voltage drop is noticed across these components, suspect A3CR109 or A3Q317B. Since no dc current flows through any of the series resistances or FETS (drain to source), no voltage drops should occur.

Table 8-7. A3U102 Latch Outputs

Video BW	Pin 2	Pin 5	Pin 7	Pin 10	Pin 12	Pin 15
300 Hz	H	L	L	L	L	L
1 kHz	L	L	L	L	L	H
3 kHz	L	H	L	L	L	L
10 kHz	L	L	L	L	H	L
30 kHz	H	L	H	L	L	L
100 kHz	L	L	H	L	L	H
300 kHz	L	H	H	L	L	L
1 MHz	L	L	H	L	H	L
3 MHz	L	L	L	H	L	L

Video Filter Buffer Amplifier

See function block W of A3 Interface Assembly Schematic Diagram (sheet 5 of 6).

The video filter buffer amplifier provides outputs for video trigger, positive and negative peak detectors, and the analog zero-span (sweeps <30 ms). The zero-span video output is terminated in 500 ohms on the A2 Controller assembly. The amplifier is a high-input-impedance buffer amplifier with a terminated gain of one.

Current source U307C provides twice the current of Q316. Resistor R145 and current source U307D shift the dc level. Resistor R260 terminates the peak detector inputs in 500 ohms. The unterminated gain is 1.1. Diode CR114 prevents latchup during positive overdrive conditions while CR113 protects Q318 during overdrive. Diode CR117 is a 12.7 V zener that limits the peak detector's output to +1.5 V. Typically, limiting occurs at 1.1 V.

Positive/Negative Peak Detectors

See function blocks Y and Z of A3 Interface Assembly Schematic Diagram (sheet 5 of 6).

The following information pertains to the positive peak detector and is applicable to troubleshooting the negative peak detector.

The positive peak detector consists of an input amplifier (A3U204 and A3Q210) followed by detector diodes (A3CR203 and A3CR204) and hold capacitor A3C217. Output amplifier A3Q206, Q211, and Q212 buffers the hold capacitor. Both the input and output amplifiers have a gain of one. Each amplifier has local feedback. On the output amplifier the emitter of Q212 connects to Q206's gate. On the input amplifier the feedback goes through Q209 and Q208 back to the base of U204D. Global feedback occurs from the output amplifier through R223 back to the input amplifier U204D. The peak detector resets through Q207.

1. Set the HP 8562A/B controls as follows:

   CENTER FREQ ..... 300 MHz
   SPAN ..... 500 MHz
   RES BW ..... Auto
   VIDEO BW ..... Auto
   LOG dB/DIV ..... 10 dB/div

2. If the HP 8562A/B does not meet the conditions in steps a through e below, the positive and negative peak detectors are probably faulty. Continue with step 3 to check the detectors.

   a. The peak-to-peak deviation of the noise in NORMAL detector mode should be approximately two divisions. Note the amplitude levels of the top and bottom of the displayed noise.
   b. Select POS PEAK detector mode.
   c. Confirm that the noise is about one-third division peak-to-peak. The noise should also be no higher than the top of the noise level in NORMAL detector mode.
   d. Select NEG PEAK detector mode. The noise should be about one-third of a division peak-to-peak. The noise should also be no lower than the bottom of the noise in NORMAL mode.
   e. Select SAMPLE detector mode. Check that the noise appears between the top and bottom of the noise in NORMAL mode.

3. On the HP 8562A/B, connect the front-panel CAL OUTPUT to the INPUT 50Ω and set the controls to the following settings:

   CENTER FREQ ..... 300 MHz
   SPAN ..... 0 Hz
   SWEEP TIME ..... 5 s
   DETECTOR MODE ..... POS PEAK

4. Monitor A3TP17 and A3TP16 simultaneously with an oscilloscope.

5. Change the reference level from −10 dBm to +30 dBm and verify a voltage change at both A3TP17 and A3TP16 of 1 V to 0.6 V in 100 mV steps.

6. Check the entire range of the detector by substituting a dc source at J101 and varying its output from 0 to 1 volt.

7. If the peak detector appears latched up, check LPOS_RST at A3J201 for a negative TTL level reset pulses. The reset pulses should occur every 130 μs and should be approximately 250 ns wide.

8. If the reset pulses are absent, troubleshoot the Peak Detector Reset circuitry.

9. If the reset pulses are present, check the gate of Q207. The pulses should be positive-going from −12.7 V to −1.35 V.

10. The peak detector can be made into a unity gain amplifier by shorting the cathode of CR203 to the anode of CR204. If the peak detector functions normally as a unity gain amplifier, suspect Q208 or CR203 or CR204.

Peak Detector Reset

See function block R of A3 Interface Assembly Schematic Diagram (sheet 4 of 6).

1. Press (PRESET) on the HP 8562A/B and set the controls as follows:

   CENTER FREQ ..... 300 MHz
   SPAN ..... 0 Hz
   SWEEP TIME ..... 5 s
   DETECTOR MODE ..... POS PEAK

2. Check that HHOLD (A3U526 pin 11) has 18 μs wide pulses every 128 μs.

3. Check that HODD (U408 pin 5) is a square wave with a period of 16.7 ms (2 × sweep time/600).
4. Check LPOS_RST (U422 pin 4) for 200 ns low-going pulses every 128 μs.
5. Check LNEG_RST (A3U422 pin 12) for 200 ns low-going pulses every 128 μs.
6. Set the detector mode to NORMAL and check that LNEG_RST has two pulses spaced 40 μs apart and then a single pulse approximately 88 μs from the second pulse.
7. Check HMUX_SEL0 (A3U408 pin 3) and HMUX_SEL1 (A3U408 pin 9) according to Table 8-8.

Table 8-8. HMUX_SELO/1 Versus Detector Mode

Detector Mode	HMUX_SEL0	HMUX_SEL1
NORMAL	40 μs pulse every 128 μs	40 μs pulse every 128 μs
SAMPLE	H	H
POS PEAK	L	H
NEG PEAK	H	L

Rosenfell Detector

See function block S of A3 Interface Assembly Schematic Diagram (sheet 4 of 6).

If both HPOS_HLDNG and HNEG_HLDNG are high during the same bucket, HROSENFELL will also be set high. This indicates that the video signal probably consists of noise, since it rose and fell during the same period. The HROSENFELL signal is valid only when the NORMAL (rosenfell) detector mode is selected.

1. Press (PRESET) on the HP 8562A/B and set the controls as follows:

   CENTER FREQ ..... 300 MHz
   SPAN ..... 0 Hz
   SWEEP TIME ..... 5 s
   DETECTOR MODE ..... NORMAL

2. Check LPOS_RST and LNEG_RST as described in "Peak Detector Reset."
3. Check A3U423 pin 4 for 3.3 μs, low-going pulses every 90 μs.
4. Check that HROSENFELL (A3U610 pin 6) has two pulses spaced approximately 40 μs apart and then a third pulse 90 μs from the second pulse. Each pulse should be approximately 3 μs wide and low-going.
5. Monitor HROSENFELL with an oscilloscope while reducing the video bandwidth from 1 MHz to 1 kHz.
6. As the video bandwidth is decreased to 1 kHz, the HROSENFELL line should increasingly show a low logic level. With a video bandwidth of 1 kHz, a nearly flat line should be displayed on the CRT.
7. Check that HPOS_HLDNG (A3U416 pin 4) is mostly high with a 1 MHz video bandwidth and mostly low with a 1 kHz video bandwidth.

8. Check that HNEG_HLDNG (U416 pin 9) is mostly high with a 1 MHz video bandwidth and mostly low with a 1 kHz video bandwidth.

ADC MUX

See function block AA of A3 Interface Assembly Schematic Diagram (sheet 6 of 6).

The ADC MUX switches various inputs into the video path for conversion by the ADC. The SCAN RAMP input is used during non-zero-span sweeps. The YTO ERR, FCMUX, CAL OSC TUNE, and OFL ERR inputs are used only during diagnostic and auto adjust routines.

1. Set the HP 8562A/B to the following settings:

   CENTER FREQ ..... 300 MHz
   SPAN ..... 0 Hz
   REF LEVEL ..... −10 dBm
   SWEEP TIME ..... 50 s
   DETECTOR MODE ..... SAMPLE

2. Refer to Table 8-9 and check for correct logic levels at A3U108 pins 1, 15, and 16. Check for proper output signals at TP6. If the select lines are not changing, suspect the ADC ASM or the VGA/ADC MUX Control. If the select lines are changing, but the proper video inputs are not being switched to the output, replace U108.

3. Check for the presence of the YTO ERR signal at A3J2 pin 42 with an oscilloscope probe.

4. If the voltage is zero during a sweep and positive during retrace (YTO is being locked), the fault is on the A3 assembly. If a constant dc voltage is present, refer to Chapter 11 to troubleshoot the Synthesizer Section.

Table 8-9. Logic Levels at A3U108

Detector Mode	U108 pin 1	U108 pin 15	U108 pin 16
SAMPLE	H	L	H
POS PEAK	H	L	L
NEG PEAK	L	H	L

5. Set the HP 8562A/B to the following settings:

   SPAN ..... 1 MHz
   SWEEP TIME ..... 50 ms

6. Check for the presence of the SCAN RAMP signal by connecting an oscilloscope probe to A3J2 pin 45 (component side of A3J2). Connect the negative-probe lead to A3TP4.

7. A 0 to 10 V ramp should be present in both LINE and FREE RUN trigger modes. If the waveform is present only in LINE trigger, ADC control signal HBADC CLK0 may be faulty. Refer to "ADC Control Signals" in this chapter. The presence of the ramp in both modes indicates a faulty A3 Interface assembly.

8. If the scan ramp is present, but is not being switched to the output of U108, replace U108. If the scan ramp is absent in either mode, do the following:

   a. Connect the oscilloscope probe to A3J400 pin 15 (HSCAN).

b. A TTL signal (high during 50 ms sweep time and low during retrace) should be present, indicating A3 is working properly. Refer to Chapter 11 to troubleshoot the Synthesizer Section. A faulty TTL signal indicates a bad A3 Interface assembly.

9. Set the HP 8562A/B to the following settings:

   SWEEP TIME ..... 100 ms
   SPAN ..... 100 MHz
   IF Adjust ..... ON

10. Check for the presence of the CAL OSC TUNE signal by monitoring A3J401 pin 25 with an oscilloscope. A signal greater than 10 V peak-to-peak during part of the retrace period indicates a faulty A3 assembly.

11. If a constant dc voltage is present during the sweep and all of the retrace period, refer to Chapter 9 to troubleshoot the IF Section.

Variable Gain Amplifier (VGA)

See function block AB of A3 Interface Assembly Schematic Diagram (sheet 6 of 6).

The VGA provides adjustable gain in the video path. Its nominal gain of 7 can be adjusted ±10%. U112 removes dc offset to keep U113 in its monotonic range. (Both U112 and U113 are set to the same value.) There is no easy way to change the DAC settings from the front panel.

Track and Hold

See function block AC of A3 Interface Assembly Schematic Diagram (sheet 6 of 6).

1. Press (PRESET) on the HP 8562A/B and set the controls as follows:

   CENTER FREQ ..... 300 MHz
   SPAN ..... 0 Hz
   DETECTOR MODE ..... Sample
   REF LVL ..... −70 dBm
   LOG dB/DIV ..... 2 dB/div
   SWEEP TIME ..... 50 μs

2. Disconnect any signal from the analyzer input. A full scale display of sampled noise should be present.

3. Trigger an oscilloscope on the positive going edge of HHOLD (A3U506 pin 16).

4. The waveform at A3TP10 should be random noise with an average level of approximately 4 V. The noise should have a flat spot in its response while HHOLD is high, indicating proper operation of U114.

A3 Assembly's ADC Circuits

The ADC consists of a 12-bit DAC, 12-bit successive approximation register (SAR), data multiplexers, and data latches. The ADC ASM (algorithmic state machine) controls the ADC. Eight inputs are controlled by the ADC MUX. These include a positive peak detector, negative peak detector, sampled video, scan ramp, YTO error voltage, FC MUX voltages, Cal Oscillator tune voltage, and offset lock error voltage. A MUX on the A14 Frequency Control Assembly selects which voltage is sent to the ADC MUX on the FC MUX signal line.

During NORMAL detector mode sweeps, when noise is detected by the rosenfell detector, the ADC ASM automatically switches between POS PEAK and NEG PEAK.

ADC Control Signals

See function blocks B and F of A3 Interface Assembly Schematic Diagram (sheet 2 of 6).

The ADC requires two signals from the A2 Controller Assembly: HBADC CLK0 and HBKT_PULSE. HBKT_PULSE is used only in zero span. Use the following steps to verify the signals.

1. Disconnect W22 from A2J8.
2. If a 10 MHz TTL signal is absent on W22, refer to Chapter 11 and troubleshoot the 10 MHz Reference on the A15 RF Assembly.
3. Set the HP 8562A/B's [SPAN] to zero.
4. With an oscilloscope probe, monitor A3J401 pin 20.
5. If TTL pulses are absent, the A2 Controller Assembly is faulty. Refer to Chapter 10. The presence of TTL pulses indicates a faulty A3 assembly.
6. Monitor A3J401 pin 23 (HBADC CLK0). If a 1 MHz TTL clock signal is present, HBADC CLK0 is working properly.
7. If HBKT_PULSE or HBADC CLK0 is missing, disconnect A3W1 from A2J2.
8. Monitor A2U5 pin 3 for HBKT_PULSE and A2U5 pin 7 for HBADC CLK0.
9. If HBADC CLK0 is absent, troubleshoot the A2 Controller assembly.
10. HBKT_PULSE is absent, refer to Chapter 10 for information on troubleshooting the frequency counter.
11. Reconnect A3W1 to A2J2.

ADC Start/Stop Control

See function block B of A3 Interface Assembly Schematic Diagram (sheet 2 of 6).

The ADC Start/Stop Control determines the start time of all ADC conversions. Multiplexer A3U509 chooses the source of the start signal. Both HSTART_SRC and HBUCKET tell the ASM to start a conversion.

1. Press (PRESET) on the HP 8562A/B and set the following controls:

   SPAN ..... 0 Hz
   SWEEP TIME ..... 60 s
   DETECTOR MODE ..... SAMPLE

2. Check for a TTL high at A3U509 pin 2 and a TTL low at A3U509 pin 14.
3. Set the detector mode to NORMAL.
4. Check that A3U509 pins 2 and 14 are both TTL low.
5. Set the HP 8562A/B to the following settings:

   SPAN ..... 1 MHz
   DETECTOR MODE ..... SAMPLE

6. Check that A3U509 pins 2 and 14 are both TTL high.
7. Press (PRESET) and **REALIGN LO & IF**. During the realignment, A3U509 pins 2 should be TTL low and pin 14 should be TTL high. If correct, the Start/Stop Control circuitry is being selected properly by the processor and U508 in the ADC Register block is working properly.
8. Press (PRESET) on the HP 8562A/B and set the controls as follows:

   SPAN ..... 0 Hz
   DETECTOR MODE ..... SAMPLE
   SWEEP TIME ..... 400 ms

9. Check that A3U509 pins 7 and 9 have identical 15 μs pulses with a 667 μs period (sweep time/600). The pulses should be present during the sweep but absent during retrace.
10. Set the detector mode to NORMAL.
11. Check that A3U509 pin 9 has pulses every 130 μs and U509 pin 7 has pulses every 333 μs (although pulse widths may be changing).

ADC ASM

See function block F of A3 Interface Assembly Schematic Diagram (Sheet 2 of 6).

1. Press (PRESET) on the HP 8562A/B and set the controls as follows:

   SPAN ..... 0 Hz
   SWEEP TIME ..... 60 s
   DETECTOR MODE ..... SAMPLE

2. Check that HSTART_SRC (U504 pin 4) goes TTL high, causing HHOLD (U506 pin 16) to go high 15 μs later.
3. Check that HSTART_ADC (U506 pin 15) goes TTL high 19 μs after HSTART_SRC goes high.
4. HHOLD should stay TTL high for approximately 18 μs, and HSTART_ADC should stay high for approximately 31 μs.
5. Check that LCMPLT (U504 pin 15) goes TTL low 12 μs after HSTART_ADC goes high (12 bits at 1 μs per bit). LCMPLT indicates that the successive approximation register (SAR) has completed the ADC conversion.
6. Check that LDONE (U506 pin 19) goes TTL low approximately 2 μs after LCMPLT goes low.

ADC

See function block S of A3 Interface Assembly Schematic Diagram (sheet 2 of 6).

The successive approximation register (SAR) consists of A3U513. Upon the occurrence of HSTART_ADC, the SAR successively toggles bits from high to low starting with the most significant bit. The digital result is then converted to an analog current in DAC U518 and compared with the SAMPLED VIDEO. If the DAC current is too high, the output of U512 will be high, telling the SAR that the "guess" was high and that the bit just toggled should be set low. It then moves on to the next most significant bit until all 12 bits have been "guessed" at. Each "guess" takes 1 μs (one cycle of HBADC_CLK0), or 12 μs to complete a conversion. When the conversion is completed, the SAR sets LCMPLT low. The bits are written to the data bus by buffers U514 and U516.

1. Set the HP 8562A/B controls as follows:

   CENTER FREQ ..... 300 MHz
   SPAN ..... 0 Hz
   SWEEP TIME ..... 60 s
   DETECTOR MODE ..... SAMPLE

2. Trigger an oscilloscope on HSTART_ADC (U506 pin 15) and monitor the outputs Q1 through Q11 of the SAR. With the exception of Q11, each bit should start high and be switched low. It will either stay low or return to a high state 1 μs later, depending on the comparison at U512.
3. If the Q outputs do not exhibit this bit pattern, and the ADC ASM checks are working properly, replace U513. If the output of comparator U512 does not toggle back and forth during a conversion, replace either U512 or CR502.

Note Since U512 pin 2 is at a virtual ground (currents are being summed at this node), voltage levels at this point are difficult to interpret.

Ramp Counter

See function block D of A3 Interface Assembly Schematic Diagram (sheet 2 of 6).

The ramp counter is used for non-zero-span sweeps and for zero-span sweep times greater than 60 seconds. The analog sweep ramp is compared to the digital ramp counter. When the analog sweep ramp exceeds the DAC output generated for that ramp counter setting, HRAMP_COMP toggles high, indicating the end of a bucket. The ramp counter counts horizontal buckets. There are 600 buckets per sweep, so the ramp (bucket) counter counts from 0 to 600. The ramp counter is incremented by HRST_PK_ENA.

1. Press (PRESET) on the HP 8562A/B and set the controls as follows:

   SPAN ..... 1 MHz
   DETECTOR MODE ..... SAMPLE

2. For sweep times between 100 ms and 60 s, HODD (A3U525 pin 3) is a square wave with a period defined by (2 × sweep time/600). For example, for a 6 s sweep time, HODD has a period of 20 ms. The ramp (bucket) counter will be odd every other bucket.

A3 Assembly's Control Circuits

A digital control problem will cause the following three steps to fail.

1. On the HP 8562A/B, press (AMPLITUDE), ATTEN, (7), (0), and (dB).
2. A click should be heard after pressing dB in step 1, unless ATTEN was previously set to 70 dB.
3. Press (1), (0), and (dB). Another click should be heard. If no clicks were heard, but the ATTEN value displayed on the CRT changed, the digital control signals are not operating properly.

Analog Bus Drivers

See function block N of A3 Interface Assembly Schematic Diagram (sheet 4 of 6).

1. Press (PRESET) on the HP 8562A/B, and set the controls as follows:

   SPAN ..... 0 Hz
   TRIGGER ..... Single

2. Monitor A3U401 pin 3 (LRF_STB) with an oscilloscope or logic probe. This is the strobe for the A15 RF Assembly.
3. Press (INT) and check that pulses occur when toggling between SIG ID ON and SIG ID OFF.
4. Monitor U401 pin 5 (LFC_STB) with an oscilloscope or logic probe. This is the strobe for the A14 Frequency Control Assembly.
5. Press (AMPLITUDE) and check that pulses occur when toggling between ATTEN settings of 10 and 20 dB.
6. Monitor U401 pin 7 (LIF_STB) with an oscilloscope or logic probe. This is the strobe for the A5 IF Assembly.
7. Press (AMPLITUDE) and check that pulses occur when toggling between REF LEVEL settings of −10 dBm and −20 dBm.
8. Monitor U401 pin 9 (LLOG_STB) with an oscilloscope or logic probe. This is the strobe for the A4 Log Amplifier Assembly.
9. Press (AMPLITUDE) and check that pulses occur when toggling between LINEAR and LOGdB/div.
10. To check the Address and Data Lines, place a jumper from A3TP1 and A3TP2 to A3U406 pin 20 (+5 V).
11. Check that address lines A0 through A7 and data lines D0 through D7 are all TTL high.
12. If any address or data line is low, set the LINE switch OFF and disconnect the W2 control cable from A3J2. Set the LINE switch ON. Ignore any error messages.
13. Check that address lines A0 through A7 and data lines D0 through D7 are all high. If all address and data lines are high, suspect a fault either in W2 or one of the other four assemblies which connect to W2.

14. If any address or data line is low, check the appropriate input of either U405 (data lines) or U406 (address lines).
15. If a data line input is stuck low, check the data bus buffer. If an address line input is stuck low, check A3W1 and the A2 Controller Assembly.
16. If the appropriate input is high or toggling between high and low, suspect a failure in either U405 (data lines) or U406 (address lines).

Analog Bus Timing

See function block P of A3 Interface Assembly Schematic Diagram (sheet 4 of 6).

Analog bus timing (ABT) generates the strobes for the A4, A5, A14, and A15 assemblies. The A14 Frequency Control Assembly also requires a qualifier for its strobe, LVFC_ENABLE. A3U400 and A3U414 provide a 2 μs delay between the time HANA_BUS goes high and the enable line to demultiplexer A3U407 goes low.

1. Press (PRESET) on the HP 8562A/B and set the controls as follows:

   CENTER FREQ ..... 300 MHz
   SPAN ..... 100 MHz

2. Check that A3U407 pin 1 goes low approximately 2 μs after HANA_BUS (A3U400 pin 3) goes high.
3. If HANA_BUS is absent, check for pulses on ABT A3U505 pin 2 and IA10 (A3U505 pin 5).
4. If A3U407 pin 1 is not delayed 2 μs from HANA_BUS, check for the presence of the 1 MHz HBADC_CLK0.
5. If A3U407 pin 1 is not delayed 2 μs from HANA_BUS and HBADC_CLK0 is correct, suspect a fault in either A3U414 or A3U400.
6. Press (PRESET) and set the controls as follows:

   SPAN ..... 0 Hz
   TRIGGER ..... SINGLE

7. Monitor A3U401 pin 3 (LR_STB) with an oscilloscope or logic probe. This is the strobe for the A15 RF Assembly.
8. Press (INT) and check that pulses occur when toggling between `SIG ID ON` and `SIG ID OFF`.
9. Monitor A3U401 pin 5 (LF_STB) with an oscilloscope or logic probe. This is the strobe for the A14 Frequency Control Assembly.
10. Press (AMPLITUDE) and check that pulses occur when toggling between `ATTEN` settings of 10 and 20 dB.
11. Monitor A3U401 pin 7 (LI_STB) with an oscilloscope or logic probe. This is the strobe for the A5 IF Assembly.
12. Press (AMPLITUDE) and check that pulses occur when toggling between `REF LEVEL` settings of −10 dBm and −20 dBm.

13. Monitor A3U401 pin 9 (LV_STB) with an oscilloscope or logic probe. This is the strobe for the A4 Log Amplifier Assembly.
14. Press (AMPLITUDE) and check that pulses occur when toggling between LINEAR and LOG dB/div.

Interface Strobe Select

See function block K of A3 Interface Assembly Schematic Diagram (sheet 3 of 6).

Interface strobe select generates the various strobes used by circuits on the A3 Interface Assembly. Tables 8-10 and 8-11 are the truth tables for demultiplexers A3U410 and A3U500.

Table 8-10. Demultiplexer A3U410 Truth Table

Selected Output Line	IA1	IA2	IA3
Pin 15, LSCAN_KBD	L	L	L
Pin 14, not used	H	L	L
Pin 13, LDAC1	L	H	L
Pin 12, LDAC2	H	H	L
Pin 11, LDAC3	L	L	H
Pin 10, not used	H	L	H
Pin 9, not used	L	H	H
Pin 7, LADC_REG1	H	H	H

Table 8-11. Demultiplexer A3U500 Truth Table

Selected Output Line	IA0	IA1	IA2
Pin 15, LSENSE_KBD	L	L	L
Pin 14, LINT_PRIOR	H	L	L
Pin 13, LADC_DATA1	L	H	L
Pin 12, LDAC_DATA0	H	H	L
Pin 11, HCNTR_LD0	L	L	H
Pin 10, HCNTR_LD1	H	L	H
Pin 9, LRPG_RD	L	H	H
Pin 7, LADC_REG0	H	H	H

Check in

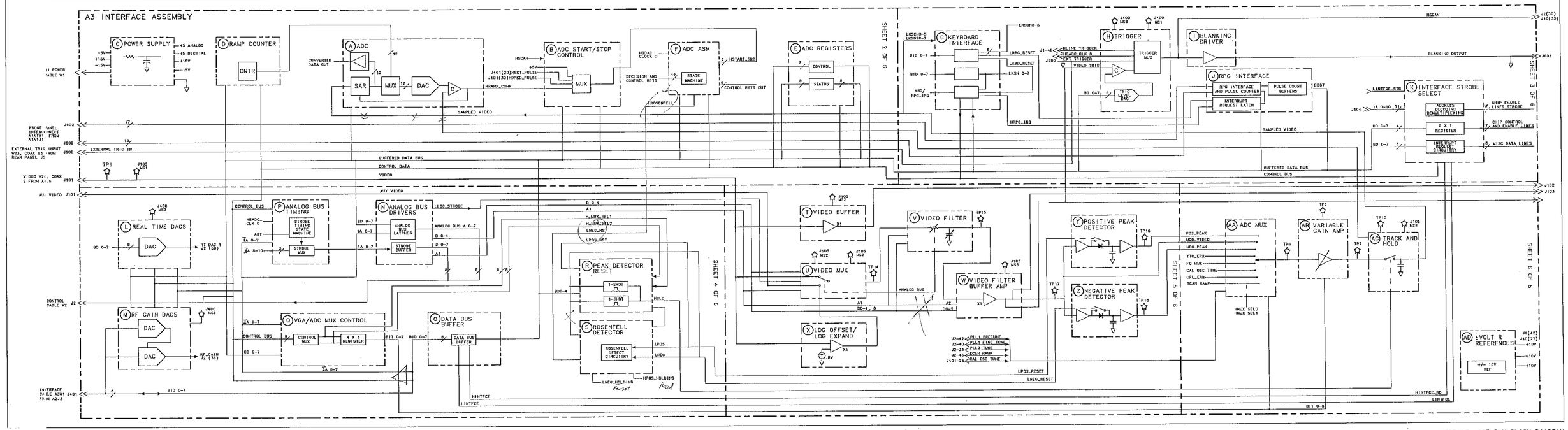

FIGURE 8-2. A3 INTERFACE ASSEMBLY BLOCK DIAGRAM

9

IF Section

The IF Section contains the A4 Log Amplifier, A5 IF, and A16 Cal Oscillator assemblies. For schematics, component locations, and replaceable parts lists for these boards, see the *HP 8562A/B Component-Level Information* manual.

	Page
Troubleshooting Using the TAM	9-3
Troubleshooting A4 with the TAM	9-4
Troubleshooting A5 with the TAM	9-4
Troubleshooting A16 with the TAM	9-8
Automatic IF Adjustment	9-9
Parameters Adjusted	9-10
Requirements	9-11
Performance Test Failures	9-11
IF Gain Uncertainty Performance Test	9-11
Scale Fidelity Performance Test	9-12
Resolution Bandwidths Performance Tests	9-12
A4 Log Amplifier Assembly	9-13
Log Amplifier	9-13
Linear Amplifiers	9-14
Detector	9-15
Buffer Amplifier	9-15
Video Offset	9-16
Video Buffer Amplifier	9-16
Video Output	9-16
Frequency Counter Prescaler/Conditioner	9-17
AM/FM Demodulator	9-17
A5 IF Assembly	9-18
IF Signature	9-19
Common IF Signature Problems	9-23
1 MHz Resolution BW Problems	9-25
30 kHz Resolution BW Problems	9-27
3 kHz and 10 kHz Resolution BW Problems	9-27
100 Hz Resolution BW Problems	9-27
Step Gains	9-28
A16 Cal Oscillator Assembly	9-29
Cal Oscillator Unlock at Beginning of IF Adjust	9-30
Inadequate CAL OSC AMPTD Range (A16R32)	9-30
100 Hz to 3 kHz RES BW Out of Specification	9-31
Low Pass Filter	9-35
Sweep Generator	9-35
AM/FM Demodulation, Audio Amplifier, and Speaker	9-36

Note

Because the A16 Assembly is such an integral part of the IF adjustment, always check this Assembly first before checking the rest of the IF section. A faulty A16 can cause several apparent "faults" in the rest of the IF section.

Troubleshooting Using the TAM

When using Automatic Fault Isolation, the TAM indicates suspected circuits that need to be manually checked. Use Table 9-1 to locate the manual procedure.

Table 9-2 lists assembly test connectors associated with each Manual Probe Troubleshooting test. Figure 9-1 illustrates the location of A3, A4, and A5's test connectors. Figure 9-2 illustrates the IF Section.

Note HP 85629A Test and Adjustment modules with firmware revisions A or B cannot make valid measurements on test connector A5J8.

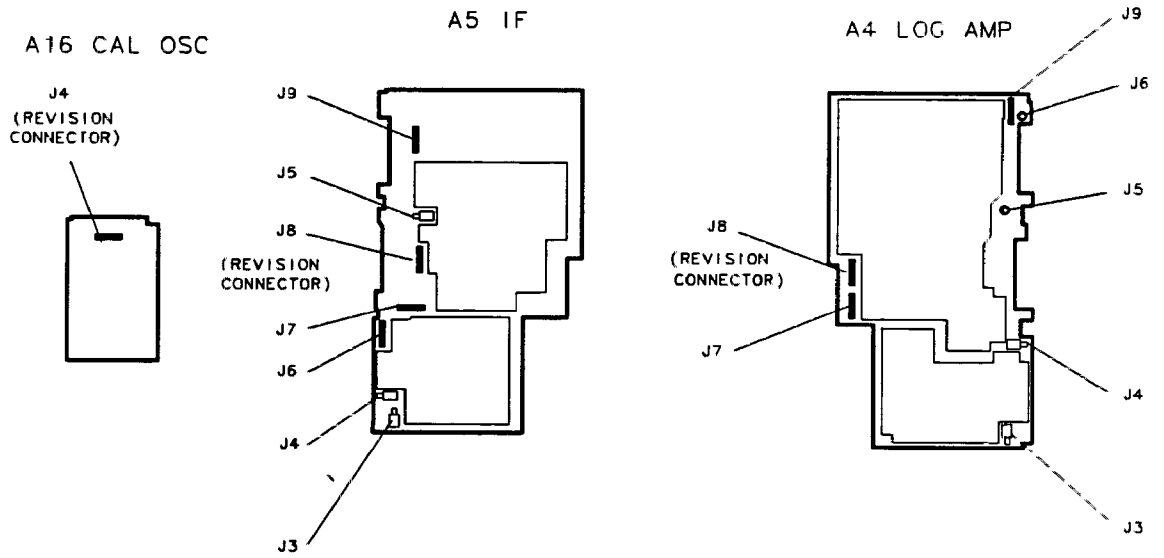

Figure 9-1. A4, A5, and A16 Test Connectors

Table 9-1. Automatic Fault Isolation References

Suspected Circuit Indicated by Automatic Fault Isolation	Manual Procedure to Perform
Check A16 Cal Oscillator	Troubleshooting A16 with the TAM
Check Input Switch on A5 IF Assembly	Troubleshooting A5 with the TAM
Check Linear Amplifiers on A4 Log Amplifier	Linear Amplifiers
Check Log Expand on A3 Interface Assembly	Refer to "Log Expand" in Chapter 8
Check Step Gains on A5 IF Assembly	Step Gains
Check Video Offsets on A4 Loc Amplifier Assembly	Video Offset *(steps 1 through 4)*
Check VIDEO OUT of A4 Log Amplifier Assembly	Video Output

Troubleshooting A4 with the TAM

Manual Probe Troubleshooting tests this assembly's nine cascaded amplifiers by calculating the bias currents into each stage. If this bias current is out of the specified range, a failure will be flagged. (This technique locates dead stages, but might not report a slightly degraded stage.)

Troubleshooting A5 with the TAM

Manual Probe Troubleshooting calculates stage bias-currents to test the operation of the IF chain. (This technique locates dead stages, but might not report a slightly degraded stage.) The DACs monitored are listed below:

FDAC1: A5U812
IFDAC2: A5U813
IFDAC3: A5U809
IFDAC4: A5U807
IFDAC5: A5U810
IFDAC6: A5U806

Table 9-2. TAM Tests Versus Test Connectors (1 of 2)

Connector	Manual Probe Troubleshooting Test	Measured Signal Lines
A3J105	Video Input to Interface	MS1
	Video to Rear Panel	MS2
	Video MUX	MS3
	Log Offset/Log Expand	MS1,MS3
	Video Filter Buffer Amplifier	MS3, MS5, OS1
	Video Peak Detectors	MS5, MS6
	ADC MUX	MS6
	Variable Gain Amplifier	MS6, MS7
	Track and Hold	MS7, MS8
A3J400	Revision	MS2
	Trigger	MS8
	ADC Start/Stop Control	MS7
	Video Trigger DAC	MS1
	Real Time DAC #1	MS3
	RF Gain DACs	MS6
A4J7	Input Converter	MS1
	Positive 15 V Supply	MS5
	1st Log Amplifier Stage	MS2
	2nd Log Amplifier Stage	MS3
	3rd Log Amplifier Stage	MS4
	4th Log Amplifier Stage	MS7
	5th Log Amplifier Stage	MS8
	6th Log Amplifier Stage	MS6
A4J8	Revision	MS5
	Voltage Reference	MS6, MS7, MS8
	7th Log Amplifier Stage	MS1, MS2
	8th Log Amplifier Stage	MS1, MS3
	9th Log Amplifier Stage	MS1, MS4
A4J9	Linear Amplifier Stage 1 Output	MS1
	Linear Amplifier Stage 2 Output	MS2
	Detector Bias Test	MS5
	Detector Buffer Test	MS6
	Video Offset/Buffer Test	MS8
A5J6	1st Step Gain Stage 1	MS1, MS2, MS8
	1st Step Gain Stage 2	MS1, MS2, MS3
	1st XTAL Pole Stage	MS2, MS3, MS4
	2nd XTAL Pole Stage	MS3, MS4, MS5
	1st LC Pole Stage 1	MS4, MS5, MS6
	1st LC Pole Stage 2	MS5, MS6, MS7

Table 9-2. TAM Tests Versus Test Connectors (2 of 2)

Connector	Manual Probe Troubleshooting Test	Measured Signal Lines
A5J7	Ref 15 dB Attenuator Stage	MS1, MS2, MS3
	2nd Step Gain Stage	MS2, MS3, MS4
	2nd/3rd Step Gain Stage	MS3, MS4, MS5
	3rd Step Gain Stage	MS4, MS5, MS6
	Fine Atten/3rd XTL Pole	MS5, MS6, MS7
	3rd XTAL Pole Stage	MS6, MS7, MS8
A5J8	Revision	MS8
	4th XTAL Pole Stage	MS1, MS2, MS3
	Post Amplifier Stage 1	MS2, MS3, MS4
	Post Amplifier Stage 3	MS3, MS4, MS5
	3rd LC Pole Stage	MS5, MS6, MS7
	4th LC Pole Stage	MS6, MS7
A5J9	IFDAC Channels 'A'	MS1
	IFDAC Channels 'B'	MS4 MS3
	IFDAC Channels 'C'	MS3, MS4
	IFDAC Channels 'D'	MS2
	Latched IF Control Lines	MS5
	Negative 15 V Supply	MS6
	Five Volt Supply	MS7
	Ten Volt Reference	MS8
A16J4	Revision	MS8
	Cal Osc Sweep Gen Hardware	MS1, MS2
	Cal Osc Tune Line Test	MS3
	Cal Osc ALC Test	MS4
	Cal Osc Sweep Gen Output	MS6

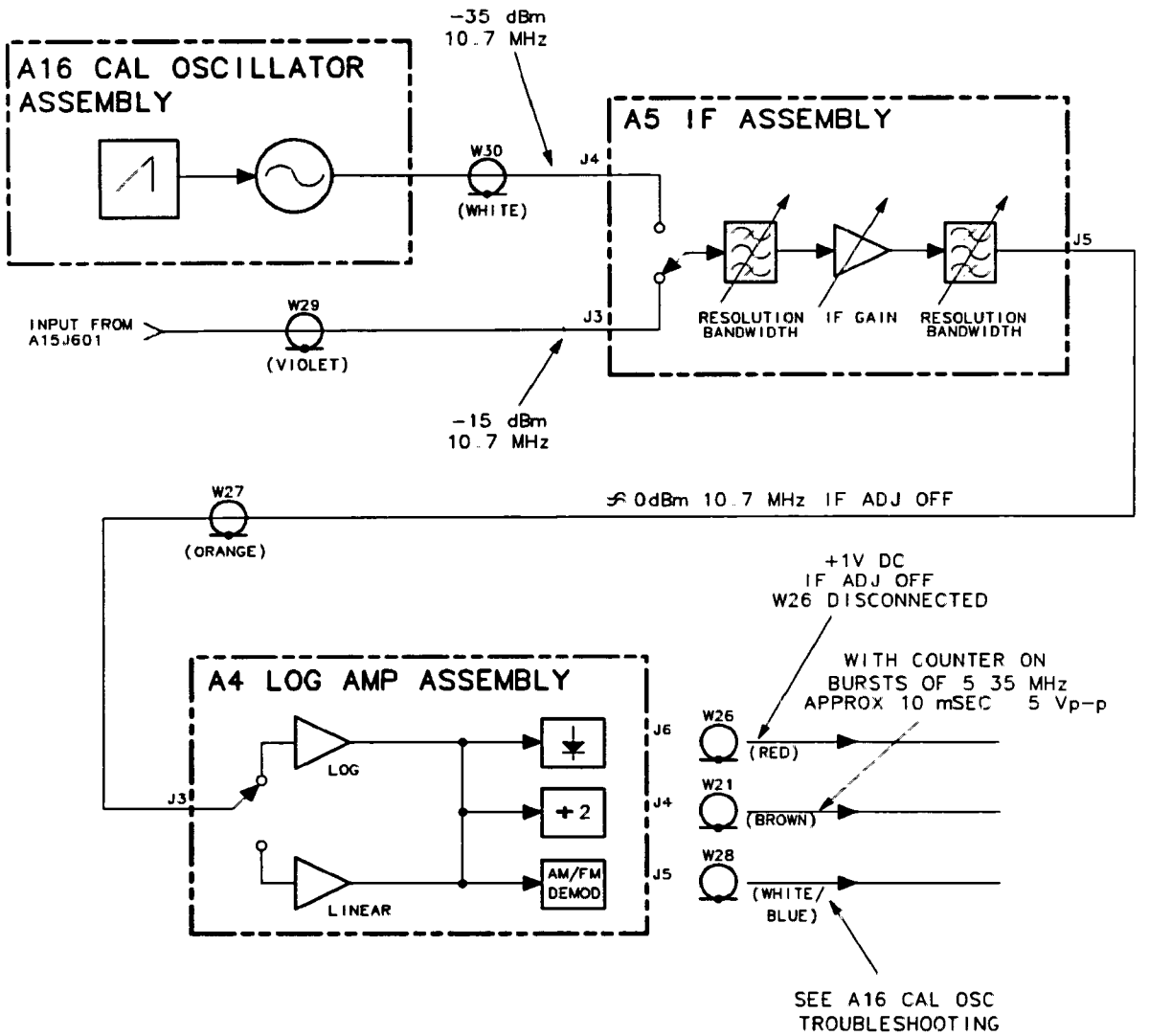

Figure 9-2. IF Section Troubleshooting with TAM

Both the digital control and DACs are multiplexed onto test point "Channels" through resistive networks. One DAC from each of the quad DAC packages feeds into a network, and the TAM varies each DAC individually to isolate a failed DAC. Similarly, 10 digitally controlled lines feed into a network and are monitored by the TAM. The "Channels" used to monitor the DACs are listed below:

Channel A: A5J9 pin 2 (MS1)
Channel B: A5J9 pin 1 (MS3)
Channel C: A5J9 pin 20 (MS4)
Channel D: A5J9 pin 19 (MS2)

1. Enter the TAM's Cal Osc Troubleshooting.
2. Disconnect W27 (orange) from A5J5 and monitor the output of A5J5 with another spectrum analyzer.

3. Set the other spectrum analyzer to the following settings:

   Span ..... 5 MHz
   Reference level ..... +10 dBm
   Center Frequency ..... 10.7 MHz

4. Set the A16 Cal Oscillator to 10.7 MHz.

5. A +10 dBm signal should be observed at A5J5. If the signal is missing, disconnect W30 (white) from A5J4. This is the Cal signal input from the A16 assembly. The signal should be −35 dBm at 10.7 MHz.

6. If the cal oscillator signal is correct, the A5 IF Assembly is probably at fault.

Troubleshooting A16 with the TAM

1. Enter the TAM's Cal Osc Troubleshooting.

2. On the HP 8562A/B, disconnect W30 (white) from A5J4 and connect W30 to the input of another spectrum analyzer.

3. Set the spectrum analyzer connected to W30 to the following settings:

   Span ..... 5 MHz
   Reference level ..... −30 dBm
   Center Frequency ..... 10.7 MHz

4. Select each of the fixed-tuned frequencies. Verify each frequency check that the signal amplitude measures −35 dBm. If the frequency is incorrect, do the following:

   a. Verify that the output of the Reference Divider (A16U13 pin 9) is 100 kHz. If not, verify that the 10 MHz reference is present at A16U13 pin 1.
   b. Verify the frequency found on the output of the divider (A16U4 pin 15) matches the output of the reference divider. Matching frequencies indicate the oscillator loop is locked. If the loop is not locked, troubleshoot the divider, oscillator, or phase detector.
   c. Verify the frequency found on the divider's input (A16U4 pin 3) matches the CW frequency chosen in step a. Matching frequencies indicate a properly working oscillator. If the frequency is different, troubleshoot the divider.
   d. Repeat Step c for all the CW frequencies provided by the test.

5. Select each of the sweep widths (these sweeps are centered about 10.7 MHz).

6. Reduce the span of the other spectrum analyzer to check that the A16 Cal Oscillator is actually sweeping. If the oscillator is not sweeping, perform the following:

7. The output of the sweep generator circuit (A16U10 pin 8 of Function Block L) should be a series of negative-going parabolas (frequency and amplitude vary depending on the sweep width chosen). Table 9-3 lists the RANGE, MA0, and MA1 values for the sweep widths. If a failure is indicated in the IF/LOG CHECK, press **More Info** to provide more detailed information about the detected failure. If an HP-IB printer is available, connect it to the analyzer's HP-IB connector and press **Print Page** for a hard copy output.

Table 9-3. Sweep Width Settings

Sweep Width	Sweep Time	RES BW Adjusted	RANGE	MA1	MA0
20 kHz	5 ms	10 kHz	+5 V	0 V	0 V
10 kHz	10 ms	3 kHz	+5 V	0 V	+5 V
4 kHz	30 ms	1 kHz	+5 V	+5 V	0 V
2 kHz	15 ms	300 Hz	+5 V	+5 V	+5 V
700 Hz	60 ms	100 Hz	0 V	+5 V	+5 V

Automatic IF Adjustment

The HP 8562A/B performs an automatic adjustment of the IF Section whenever needed. The A16 Cal Oscillator provides a stimulus signal which is routed through the IF during the retrace period. The A3 Interface Assembly measures the response using its ADC (Analog to Digital Converter). The spectrum analyzer turns the A16 Assembly off during a sweep.

When IF ADJ is ON, the analyzer readjusts part of the IF circuitry during each retrace period to completely readjust the IF every 5 minutes.

Automatic IF adjustment is performed upon the following conditions:

- **Power on:** (unless STOP ALIGN is pressed). The IF parameter variables are initialized to values loaded in Program ROM and all possible IF adjustments are made. If STOP ALIGN is pressed, the adjustment is halted.
- REALIGN LO & IF **pressed:** All possible IF adjustments (and LO adjustments) are made with the most recent IF parameter variables used as the starting point.
- FULL IF ADJ **pressed:** All possible IF adjustments are made with the most recent IF parameter variables used as the starting point. (FULL IF ADJ is located in the (IF ADJUST) menu under (AMPLITUDE).)
- ADJ CURR STATE **selected:** All amplitude data and some resolution bandwidths are adjusted. The bandwidths adjusted are a function of the currently-selected RES BW setting.
- **Between sweeps:** IF ADJ must be selected ON. When IF ADJ is OFF, an "A" is displayed along the left side of the graticule. Earlier versions of firmware automatically turn IF ADJ to OFF when in zero span. This theoretically prevents the detected video from the IF adjustment routine from being seen at the VIDEO OUTPUT.

If a FULL IF ADJ sequence cannot proceed beyond the AMPLITUDE portion, check the output of the A16 Cal Oscillator as follows:

1. Disconnect W30 (white) from A5J4. Connect W30 to the input of a second spectrum analyzer.
2. Set the other spectrum analyzer to a center frequency of 10.7 MHz and a reference level of −30 dBm.
3. Observe the spectrum analyzer display while pressing FULL IF ADJ on the HP 8562A/B.

4. If a −35 dBm signal does not appear, the A16 Cal Oscillator is probably at fault.

Parameters Adjusted

The following IF parameters are adjusted in the sequence listed:

1. AMPLITUDE
   a. Video Offsets: analog (using A4 Log Amplifier's video offset DAC) digital (applying stored constant to all readings)
      i. Linear Scale Offset
      ii. Log Scale Offset
         1) Wide-Band and Narrow-Band modes.
         2) 0 to 60 dB range in 10 dB steps.
         3) 10 dB/Div and 2 dB/Div (log expand) modes.
   b. Step Gains (A5 IF Assembly)
      i. First Step Gain for 16 different DAC settings.
      ii. Second Step Gain for 16 different DAC settings.
      iii. Third Step Gain for 0, 15, and 30 dB attenuation relative to maximum gain.
      iv. Fine Attenuator for 32 evenly-spaced DAC settings.
   c. Log Amplifier Slopes
      i. Wide-Band and Narrow-Band modes
      ii. 10dB/ Div and 2 dB/Div (log expand) modes
   d. Linear Scale Gains - On A4 Log Amp Assembly
   e. Peak Detector Offsets (both Positive and Negative Peak Detectors with respect to normal sample path used by Auto IF Adjust)
2. LC BANDWIDTHS
   a. 300 kHz RBW center frequency, bandwidth, and gain.
   b. 1 MHz RBW center frequency, bandwidth, and gain.
   c. 100 kHz RBW center frequency, bandwidth, and gain.
   d. 30 kHz RBW center frequency, bandwidth, and gain.
3. CRYSTAL BANDWIDTHS
   a. A16 Cal Oscillator's sweep rate is measured against the 100 kHz RES BW filter's skirt. This result is used in compensating the sweeps used for adjusting the crystal bandwidths.
   b. 10 kHz RBW
      i. Center frequency of LC tank that loads the crystal
      ii. Symmetry adjustment to cancel crystal's case capacitance.
      iii. Bandwidth
   c. 3 kHz RBW center frequency of LC tank and bandwidth
   d. 1 kHz RBW bandwidth
   e. 300 Hz RBW bandwidth
   f. 100 Hz RBW bandwidth (all four poles adjusted simultaneously)
   g. Gain of all RBW's relative to the 300 kHz RES BW.
4. 2 MHz RBW (Analyzer with firmware datecode 880201 or later.)

Requirements

For the Automatic IF Adjustment routine to work, the HP 8562A/B must provide the following basic functions:

1. Power Supplies
2. Control Signals
3. ADC
4. 10 MHz Frequency Reference to A16 Cal Oscillator
5. A15 RF Assembly isolation from the RF signal during IF adjustment.

A15 RF Assembly isolation is a function of the REDIR signal in A15's Flatness Compensation Control block.

The references against which the Automatic IF Adjustment routine aligns are:

1. 10 MHz reference (A15)
2. Linear Scale Fidelity, especially the 10 dB gain stage in A4's Linear Amplifier block.
3. 15 dB Reference Attenuator (A5)
4. A16 Cal Oscillator output power

Performance Test Failures

Failures in IF-Section related performance-tests may be investigated using the following information.

IF Gain Uncertainty Performance Test

Failure of this performance test indicate a possible problem with the HP 8562A/B's IF-gain circuits. Assuming no major IF problems causing IF adjustment errors, IF gain problems in the first 50 dB of IF gain (REF LVLs of 0 dBm to −50 dBm with 10 dB ATTEN) are a result of faults on the A5 IF Assembly. IF gain problems in the next 60 dB of IF gain (REF LVLs of −60 dBm to −110 dBm, 10 dB ATTEN) result from faults on the A4 Log Amp Assembly.

Table 9-4 lists the reference level range available in each band with 0 dB input attenuation. Table 9-5 lists the input required at A5J3 for displaying a signal at top screen with 10 dB input attenuation and a 0 dBm reference level.

Table 9-4. Available Reference Level Range

Band	Frequency Range (GHz)	Ref. Level Range (dBm) (0 dB Input Atten.)
0	0 to 2.9	−10 to −120
1	2.75 to 6.46	−10 to −120
2	5.86 to 13.0	−10 to −115
3	12.4 to 19.7	−10 to −105
4	19.1 to 22	−10 to −100

Table 9-5. Signal Level for Reference Level Display

Band	Frequency Range (GHz)	Input at A5J3 (dBm) (10 dB Input Atten.)
0	0 to 2.9	−5
1	2.75 to 6.46	−5
2	5.86 to 13.0	−10
3	12.4 to 19.7	−20
4	19.1 to 22	− 25

Isolate IF gain problems on A4 Log Amplifier Assembly with the following steps:

1. On the HP 8562A/B press (PRESET), (SPAN), ZERO SPAN, FREQUENCY, 1, GHz, AMPLITUDE, 5, 0, and −dBm.
2. Disconnect W27 (orange) from A5J5 and connect W27 to the output of a signal generator.
3. Set the signal generator to the following settings:

   Amplitude ..... +10 dBm
   Frequency ..... 10.7 MHz

4. Simultaneously decrease the signal generator's output and HP 8562A/B's REF LVL in 10 dB steps. The signal displayed on the HP 8562A/B's CRT should remain at the reference level for each step. Troubleshoot the A4 Assembly if the signal deviates from the reference level.
5. Repeat Steps 1 through 4 with the HP 8562A/B set to linear.

Scale Fidelity Performance Test

Failure of this performance test indicate a possible problem with the A4 Assembly.

- If the Linear, 5 dB/div, or 10 dB/div scales are out of specification, the fault is most likely on the A4 Log Amplifier Assembly.
- If only the 1 dB/div or 2 dB/div scales are out of specification, the fault is most likely on the A3 Interface Assembly.

Resolution Bandwidths Performance Tests

Most resolution bandwidth problems are a result of A5 IF Assembly failures. The maximum resolution BW setting for analyzers serial-prefixed 2750A and below is 1 MHz. The RES BWs are adjusted in the following sequence using 300 kHz as the reference: 1 MHz, 100 kHz, 30 kHz, 10 kHz, 3 kHz, 1 kHz, 300 Hz, and 100 Hz.

If the IF adjustment routine encountered an error, the previously adjusted RES BWs should be working properly and default DAC values will be used for the remaining RES BW settings.

If the IF Bandpass adjustments and the automatic IF adjustments fail to bring the resolution bandwidths within specification, troubleshoot the A5 IF Assembly.

A4 Log Amplifier Assembly

The A4 Log Amplifier Assembly performs several functions. The main signal path consists of either the 90 dB log amplifier or the 40 dB linear amplifier, detector, buffer amplifier, video offset, and video buffer amplifier. Other functions include the Frequency Counter Prescaler/Conditioner and the AM/FM Demodulator.

The Detector is essentially a full wave rectifier. The Detector linearity is factory adjusted with R549 and should not be readjusted. The Buffer Amplifier provides gain and does the differential-to-single-ended conversion. The Video Offset provides 60 dB of apparent IF gain in log mode and also removes offsets from the video amplifiers. The Video Buffer Amplifier is a unity gain buffer. The Frequency Counter Prescaler/Conditioner divides the IF frequency by two and converts the signal to HCT levels.

Caution Using an active probe, such as an HP 1120A, and another spectrum analyzer for troubleshooting is recommended. Because some spectrum analyzers, such as the HP 8566A/B, HP 8569A/B and the HP 8562A/B, have dc coupled inputs, either set the active probe for an ac coupled output or use a dc blocking capacitor between the active probe and the spectrum analyzer input.

Log Amplifier

See Function Blocks B, C, D, E, F, G, H, J, and K of A4 Log Amplifier Schematic Diagram (Sheets 2 of 3 and 3 of 3).

The Log amplifier contains nine gain-limiting stages providing 90 dB of gain. Factory-adjustment of each stage optimizes log fidelity. These adjustments should not be readjusted. The linear amplifier provides 0 dB to 40 dB of IF gain in 10 dB steps.

The Log Amplifiers should not be repaired because of the factory-only log-fidelity adjustments. Use the following steps to verify proper operation of the log amplifier chain:

1. On the HP 8562A/B press (PRESET), (SWEEP), and SINGLE.
2. Remove W27 from A4J3 and inject a 10.7 MHz signal of +10 dBm into A4J3.
3. Check the signal levels at TP405 and TP406 using an active probe and an HP 8566A/B Spectrum Analyzer in linear mode.
4. Verify 1 V RMS signals levels at TP405 and TP406.
5. Adjust the reference level of the HP 8566A/B to place the signal at the top of the graticule.
6. Reduce the input signal level in 10 dB steps while noting the signal amplitude displayed on the HP 8566A/B. The signal displayed should drop by one division for each 10 dB step. Troubleshoot the A4 Assembly if the signal does not drop properly.
7. Set the HP 8562A/B's RES BW to 100 kHz. This sets the Wide/Narrow Filter to its Narrow mode.
8. Repeat Steps 2 through 6.
9. If log fidelity is poor near the bottom of the screen or the 1 MHz RES BW is narrow, a fault might exist in the Wide/Narrow Filter switch. (See Function Block I of A4 Log Amplifier Schematic Diagram.) Check this switch as follows:

a. Monitor voltages on A4U309 pins 1 and 7 while changing the HP 8562A/B's RES BW from 100 kHz to 300 kHz.

b. If the voltages do not come within a few volts of the +15 V and −15 V supplies, replace U704 and U309.

Linear Amplifiers

See Function Block N of A4 Log Amplifier Schematic Diagram (Sheet 3 of 3).

The Linear Amplifier chain is made up of two common emitter gain stages, a 180° splitter, and four buffer stages. The common emitter stages, U701C and U701D, have programmable gains. The gain of these stages is selected by using switches U701B and U701E to change the emitter load. The gains can be selected by setting the analyzer's Reference Level.

1. On the HP 8562A/B press (PRESET), (SPAN), ZERO SPAN, (FREQUENCY), (1), GHz, (AMPLITUDE), (5), (0), −dBm, MORE, UNITS, (dBm), and (AMPLITUDE).
2. Disconnect W27 (orange) from A5J5 and connect W27 to the output of a signal generator.
3. Set the signal generator to the following settings:

   Amplitude ..... +6 dBm
   Frequency ..... 10.7 MHz

4. Simultaneously decrease the signal generator's output and HP 8562A/B's REF LVL in 10 dB steps. At each step, the signal displayed on the HP 8562A/B should be within 1 division of the reference level.
5. On the HP 8562A/B, press (SWEEP), SINGLE, (AMPLITUDE), and LINEAR.
6. Set the signal generator's amplitude to −30 dBm.
7. Measure the gain from TP101 to TP703 and from TP101 to TP704 using an active probe and another spectrum analyzer. The gains should be approximately 4 dB.
8. Decrease the HP 8562A/B's reference level to −90 dBm in 10 dB steps. Verify the levels at TP703 and TP704 increase by 10 dB with each step.
9. If there is a problem with the linear gains, check the individual stages as follows:
   a. To check the first gain stage, set the reference level to −50 dBm and measure the gain from TP101 to TP701. It should be approximately 1 dB.
   b. Change the analyzer's reference level to −80 dBm and verify that the level at TP701 increases by 20 dB.
   c. To check the second gain stage, set the reference level to −50 dBm and measure the gain from TP701 to TP702. It should be approximately 2.5 dB.
   d. Change the reference level to −60 dBm and then −70 dBm and verify that the level at TP702 increases by 10 dB at each setting.

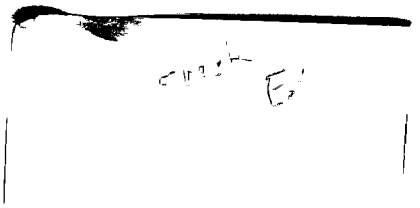

Detector

See Function Block O of A4 Log Amplifier Schematic Diagram (Sheet 3 of 3).

Note The Detector can only be factory-repaired; replace the A4 Assembly if the Detector is faulty. Do not adjust factory-only linearity adjustment, R549.

1. On the HP 8562A/B, press (PRESET), SWEEP, and SINGLE.
2. Remove W27 from A4J3.
3. The voltages at TP505 and TP506 should measure approximately +2 to +3 V dc.
4. If the difference between the voltages on TP505 and TP506 is much greater than 30 mV, there is a problem with the Detector balance; replace the A4 Log Amplifier Assembly.
5. Inject 10.7 MHz signal of +10 dBm into A4J3.
6. Decrease the signal in 10 dB steps while observing the voltage at A4TP505. The voltage should decrease by approximately 8 to 9 mV for each 10 dB decrease in input power. If the voltage does not change (or if the change is excessive) replace the A4 assembly.

Buffer Amplifier

See Function Block P of A4 Log Amplifier Schematic Diagram (Sheet 3 of 3).

The Buffer Amplifier is a differential input/single-ended output video amplifier with a gain of 6. The Buffer Amplifier includes two input buffers (U502A and U502D) and a discrete operational amplifier. The operational amplifier includes U502E, U502C, U503A, U503B, U503C, and current sources U505A and U505B. The base of U502E functions as the non-inverting input and the base of U502C functions as the inverting input. The output is the emitter of U503E. The voltage divider R524 and R525 sets the level at the non-inverting input. Feedback resistors R528 and R527 set the gain.

1. On the HP 8562A/B press (PRESET), SWEEP, and SINGLE.
2. Remove W27 from A4J3.
3. The voltage at A4TP507 should measure less than +200 mV dc.
4. If the voltage at TP507 is greater than +200 mV dc, check for excessive detector offsets (refer to "Detector" above).
5. Isolate the Buffer Amplifier offset by shorting TP505 to TP506. Check the Buffer Amplifier gain as follows:
   a. Inject a 10.7 MHz signal of +10 dBm into A4J3.
   b. The voltage at TP507 should decrease 100 mV for a 10 dB decrease in input signal level.

Video Offset

See Function Block Q of A4 Log Amplifier Schematic Diagram (Sheet 3 of 3).

The circuit provides a programmable offset of 300 mV to +900 mV in 5 mV steps.

1. On the HP 8562A/B press (PRESET), (SPAN), ZERO SPAN, FREQUENCY, (1), (GHz), (AMPLITUDE), (5),(0), and (−dBm).
2. Disconnect W27 (orange) from A5J5 and connect W27 to the output of a signal generator.
3. Set the signal generator to the following settings:

   Amplitude ..... +10 dBm
   Frequency ..... 10.7 MHz

4. Simultaneously decrease the signal generator's output and HP 8562A/B's REF LVL in 10 dB steps. At each step, the signal displayed on the HP 8562A/B should be close to the reference level.
5. Disconnect W27 from the signal generator and cycle the analyzer's power.
6. Press SWEEP and SINGLE on the HP 8562A/B.
7. The offset DAC, A4U602, should now be set to its default value, 203 (decimal). In this setting, the voltage difference from TP507 to TP601 should be approximately −90 mV.
8. If this default offset voltage is incorrect, check the operation of the DAC as follows:
   a. Measure the voltage from U602 pin 2 to TP507. The voltage should be approximately 54 mV. If the voltage is incorrect, the fault is either in the DAC, its reference current, or control latch U601.
   b. If the DAC is working properly, check the current source made up of U603B and Q601.

Video Buffer Amplifier

See Function Block R of A4 Log Amplifier Schematic Diagram (Sheet 3 of 3).

The Video Buffer Amplifier is a discrete operational amplifier. (Resistors R616 and 618 provide the feedback.) It has unity gain when loaded by the A3 Interface Assembly.

Video Output

1. On the HP 8562A/B press (PRESET), (SPAN), ZERO SPAN, FREQUENCY, (.),(3),(0),(0), (MHz), (AMPLITUDE), (1), (0), and (−dBm).
2. Connect the CAL OUTPUT to the INPUT 50Ω.
3. Disconnect W26 (red) from A4J6. Connect a test cable from A4J6 to the input of an oscilloscope.
4. Set the oscilloscope to the following settings:

   Amplitude scale ..... 0 to +1 V
   Coupling ..... dc
   Sweep time ..... 5 ms/div

5. The oscilloscope should display a flat line near +1 V dc.
6. Disconnect the CAL OUTPUT from the INPUT 50Ω.

7. Broadband noise should be displayed on the oscilloscope from approximately +200 mV to +400 mV.
8. As the REF LVL is decreased in 10 dB steps from −10 dBm, to −70 dBm the noise displayed on the oscilloscope should increase in 100 mV increments. If this response is not observed, refer to "Step Gains" and "Video Offset" in this chapter.

Frequency Counter Prescaler/Conditioner

See Function Block T of A4 Log Amplifier Schematic Diagram (Sheet 3 of 3).

The Frequency Counter Prescaler/Conditioner converts the IF signal to TTL levels and then divides the frequency by two. The circuit consists of an input attenuator, 50 dB integrated amplifier (U803), line receiver (U804), and frequency divider (U805A). The integrated amplifier and line receiver turn on only when the instrument is counting.

AM/FM Demodulator

See Function Block S of A4 Log Amplifier Schematic Diagram (Sheet 3 of 3).

The demodulator circuitry on the A4 Log Amplifier produces a low level audio signal. This audio signal is amplified by the A16 Cal Oscillator assembly. The FM demodulator demodulates narrow-band FM (5 kHz deviation) signals. The detector also demodulates AM signals.

1. If demodulation problems occur when the HP 8562A/B is in the frequency-domain, perform the Frequency Span Accuracy performance test and, if necessary, the YTO Adjustments procedure.
2. Disconnect W28 (white-blue) from A4J5.
3. Inject a 1 kHz, 50 mV peak-to-peak signal into W28.
4. On the HP 8562A/B set AM DEMOD ON and the VOLUME to 8.
5. A 1 kHz tone should be heard through the loudspeaker. If no tone is heard, step through the other VOLUME settings. As the VOLUME setting increases, the volume should increase monotonoically (except at the transition from the 7 to 8 settings).
6. If no tone is heard at any VOLUME settings, troubleshoot the A16 Cal Oscillator, loudspeaker, or W5.
7. If an FM signal cannot be demodulated, perform the Demodulator Adjustment procedure. If the output of A4J5 cannot be adjusted for 50 mV peak-to-peak as described in the Demodulator Adjustment procedure, troubleshoot the A4 Log Amplifier.

A5 IF Assembly

The Input Switch connects the IF to either the A16 Cal Oscillator or the 10.7 MHz IF output from the A15 RF Assembly. The Automatic IF Adjustment uses the A16 Cal Oscillator at instrument turn-on and between sweeps to align the IF filters and step gain amplifiers. During sweeps the Input Switch selects the 10.7 MHz IF output from A15.

The LC filters are variable-bandwidth filters that provide resolution bandwidths from 30 kHz to 1 MHz. The Automatic IF Adjustment sets the bandwidths and center frequencies of each filter stage.

The crystal filters are variable-bandwidth filters that provide resolution bandwidths from 100 Hz to 10 kHz. The Automatic IF Adjustment sets the filter's bandwidths, symmetry, and center frequency.

The step gain amplifiers consist of the First Step gain Stage, Second Step gain Stage, and Third Step gain Stage. These amplifiers provide gain when the analyzer's reference level is changed. The amplifiers also provide gain range to compensate for variations in the IF filter gains, which change with bandwidth and environmental conditions, and band conversion loss in the front end. Fixed gain amplifiers shift the signal levels to lower the noise figure of the IF chain.

The assembly has two variable attenuators. The Fine Attenuator provides the 0.1dB reference level steps. The Reference 15 dB Attenuator provides a reference for automatic adjustment of the Step gain amplifiers and the A4 Log Amp Assembly. The Reference 15 dB Attenuator also provides gain for changes in analyzer reference level.

Various buffer amplifiers provide a high-input impedance to prevent loading of the previous filter pole and a low-output impedance to drive the next filter pole.

Digital control signals from the W2 Control Cable, the "analog bus", drives the Control circuitry. At the beginning of each sweep the analog bus sets each control line for instrument operation. At the end of each sweep the analog bus sets each control line for the next portion of the Automatic IF Adjustment routine. IF adjustments continuously remove the effects of component drift as the analyzer temperature changes.

The assembly contains a reference limiting amplifier. This amplifier provides a known amount of limiting for the Automatic IF Adjustment routines. (Limiting occurs only during the Automatic IF Adjustment routines.) The LC34_Short switches are open during sweeps. The current in the reference limiter is increased during sweeps to prevent limiting.

Caution Using an active probe, such as an HP 1120A, and another spectrum analyzer for troubleshooting is recommended. Because some spectrum analyzers, such as the HP 8566A/B, HP 8569A/B and the HP 8562A/B, have dc coupled inputs, either set the active probe for an ac coupled output or use a dc blocking capacitor between the active probe and the spectrum analyzer input.

Caution Do not short control voltages to ground. These voltages are not short-circuit protected. DACs damages by shorting these voltages might not fail until several weeks after the shorted condition.

Caution Do not short power supply voltages to ground. The analyzer's power-supply current limiting cannot protect the resistors in series with the power supply.

Note Some transistors have collectors connected to the case. Electrical connection of the case to the collector might not be reliable, making collector voltage measurements on the transistor case unreliable.

IF Signature

1. Disconnect W27 (orange) from A5J5.
2. Connect the source connection of a 3 dB power splitter to A5J5. (Minicircuits Model: ZSC J-2-1) Connect one output of the power splitter to the input of an HP 8566A/B Spectrum Analyzer. Connect the other output of the power splitter to cable W27 (orange).

Note If a 3 dB power splitter is not available, an SMB tee and an active probe with a 10:1 divider may be substituted. Connect the active probe between the tee and the other spectrum analyzer. The absolute power levels will be approximately 17 dB lower than those stated below due to the elimination of the 3 dB power splitter and the 20 dB loss through the 10:1 divider.

3. Set the HP 8566A/B to the following settings:

   Reference Level ..... +10 dBm
   Center Frequency ..... 10.7 MHz
   Span ..... 0 Hz
   Resolution Bandwidth ..... 300 kHz
   Video Bandwidth ..... 300 kHz
   Sweep Time ..... 4.5 s
   Trigger ..... Single

4. On the HP 8566A/B press (SHIFT), e (Trace A Blank) to set detector to SAMPLE mode.
5. On the HP 8562A/B press (PRESET) and set the controls to the following settings:

   CENTER FREQ ..... 300 MHz
   SPAN ..... 2 MHz

6. On the HP 8562A/B, press (TRIG), SINGLE, (AMPLITUDE), MORE, and IF ADJUST.
7. Simultaneously press (SINGLE) on the HP 8566A/B and ADJ CURR IF STATE on the HP 8562A/B. The IF signature will be displayed on the HP 8566A/B display.
8. Compare the IF signature to the signature of a properly-operating HP 8562A/B illustrated in Figure 9-3. If the signatures do not closely resemble each other, a more detailed view of the signature may show the failed hardware.

   a. Set the HP 8566A/B to the following settings:

      Sweep Time ..... 0.5 s
      dB/div ..... 5 dB

b. Simultaneously press (SINGLE) on the HP 8566A/B and **ADJ CURR IF STATE** on the HP 8562A/B. Figures 9-4 through 9-8 illustrate detailed IF signatures of a properly-operating HP 8562A/B.

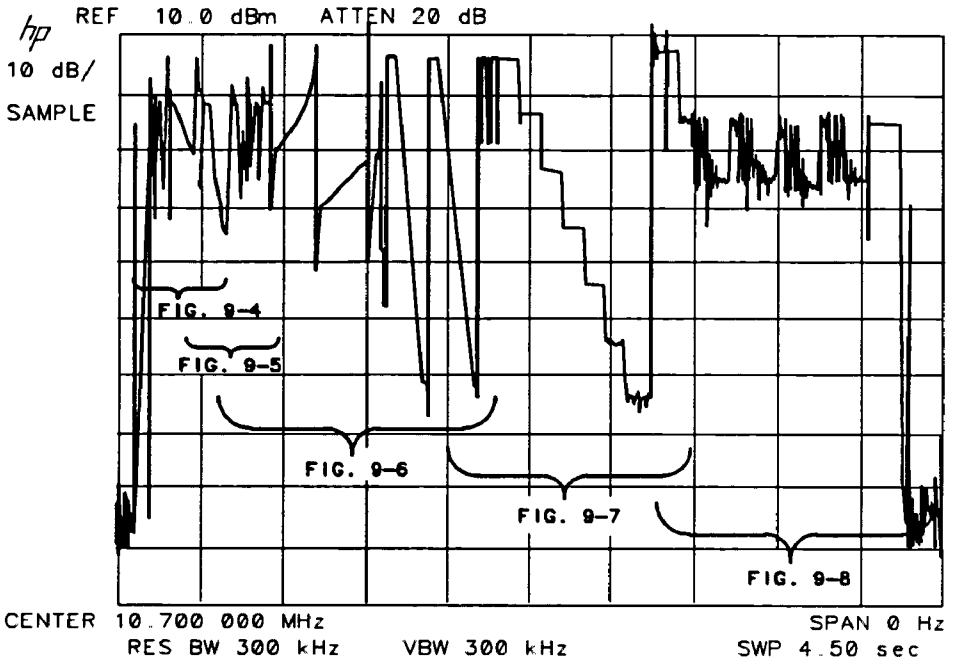

Figure 9-3. IF Adjust Signature

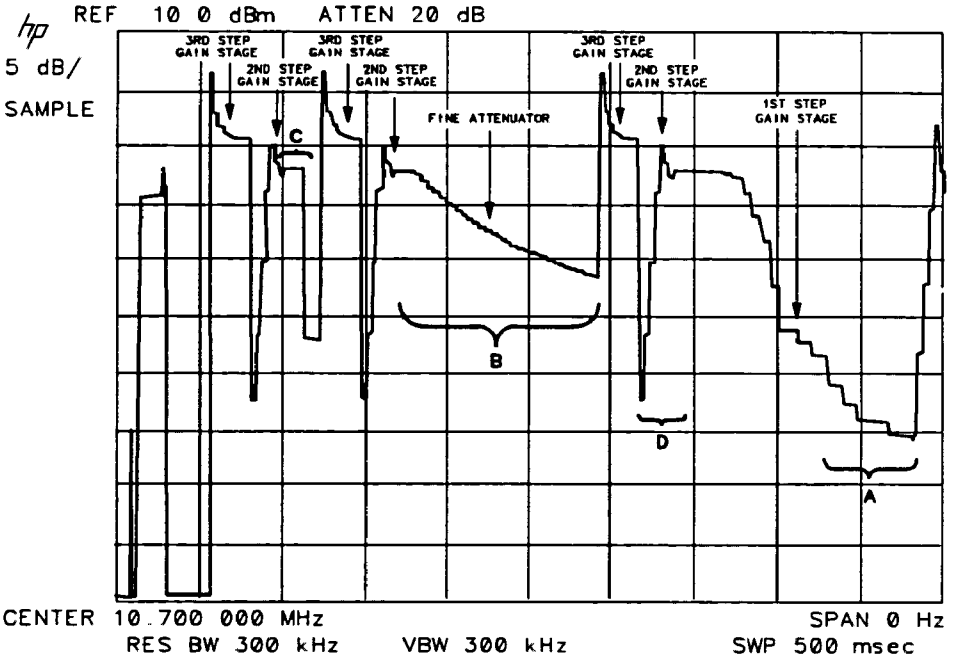

Figure 9-4. Detailed IF Adjust Signature (1)

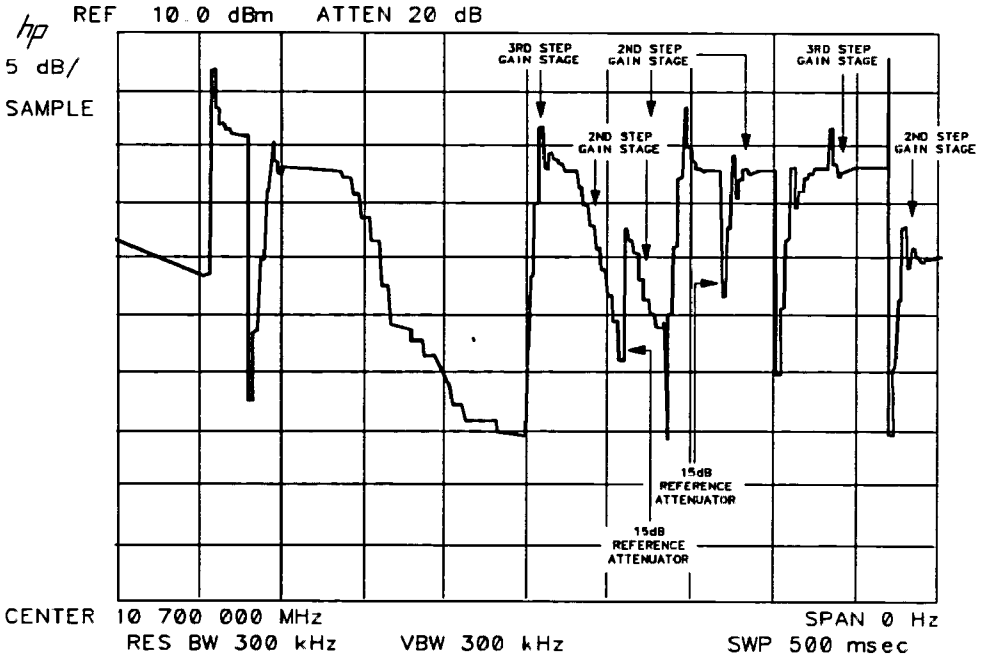

Figure 9-5. Detailed IF Adjust Signature (2)

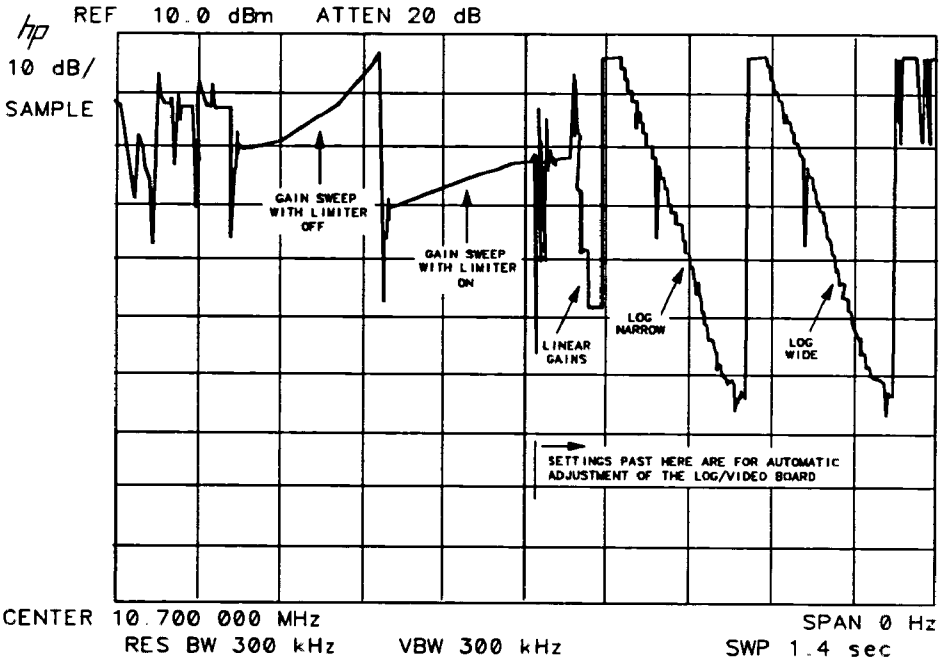

Figure 9-6. Detailed IF Adjust Signature (3)

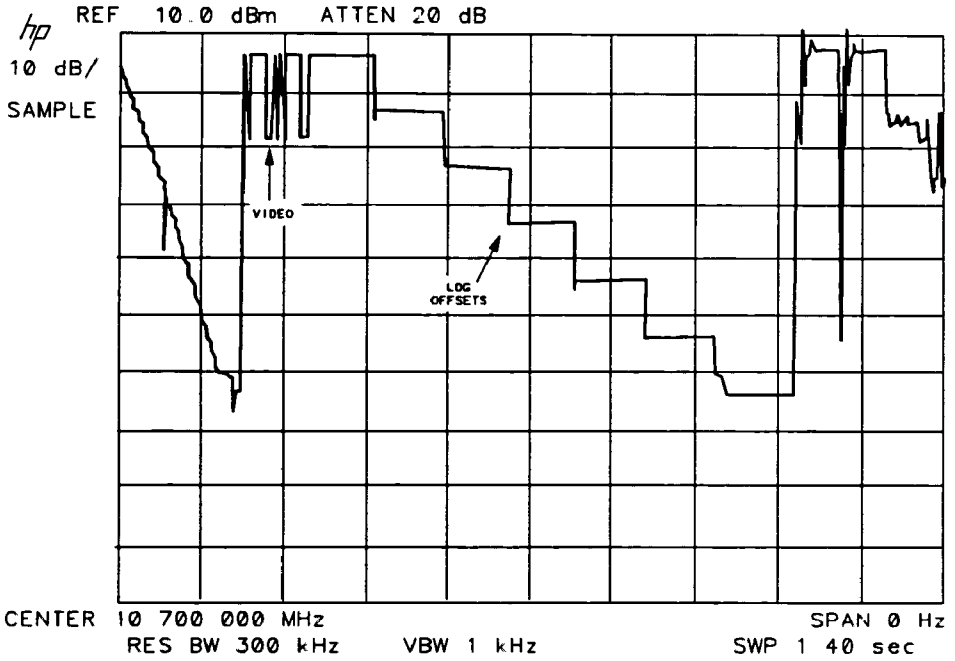

Figure 9-7. Detailed IF Adjust Signature (4)

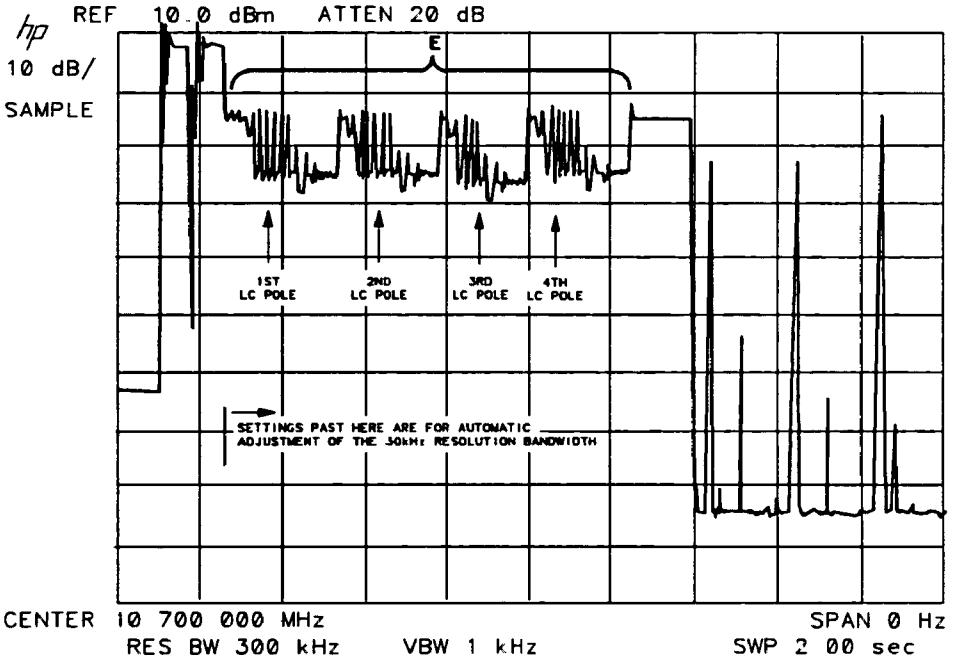

Figure 9-8. Detailed IF Adjust Signature (5)

Common IF Signature Problems

- **Region A of Figure 9-4 is Noisy:** Suspect the First LC pole.
- **Region B of Figure 9-4 is Flat:** Suspect the Third Step Gain Stage, the Fine Attenuator, or the Fourth LC Pole output amplifier.
- **Region C of Figure 9-4 has no 15 dB Step:** Suspect the Reference 15-dB Attenuator.
- **Region D of Figure 9-4 is Flat:** Suspect the Second Step Gain Stage.
- **Entire Signature Noisy:** If the signature resembles Figure 9-9, suspect a broken First Step Gain Stage or a break in the signal path in the Input Switch, First Crystal Pole, or Second Crystal Pole.
- **Correct Shape But Noisy:** If the signature resembles Figure 9-10, suspect the Second Crystal Pole output amplifier.
- **Amplitude Region B of Figure 9-4 Varies More Than 12 dB:** Suspect the Third Step Gain Stage output amplifier. See figure 9-11.
- **Region B of Figure 9-4 is Kinked:** Suspect the Fourth LC pole output amplifier. See figure 9-12.

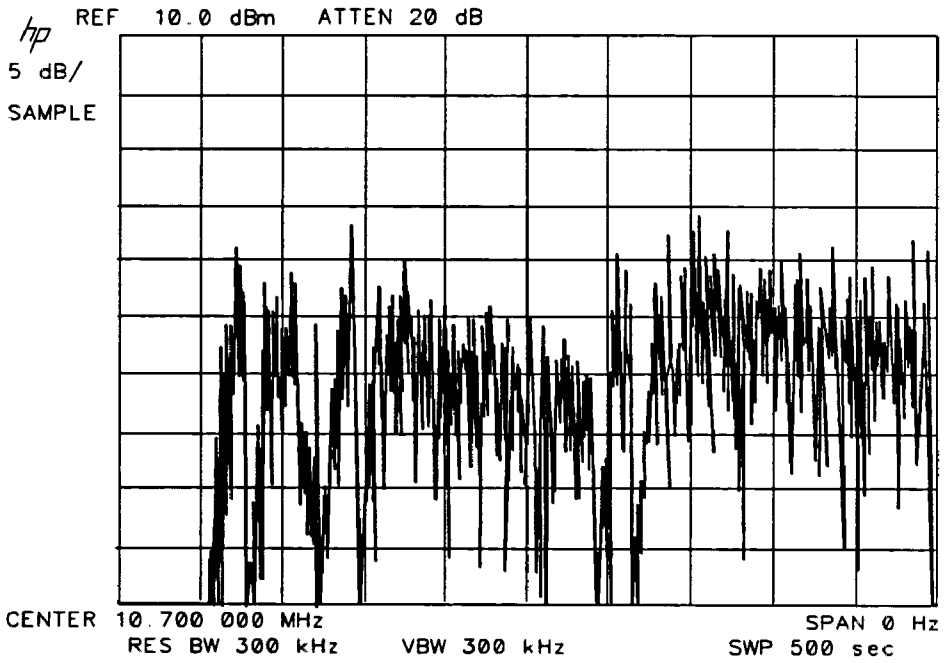

Figure 9-9. Noisy Signature

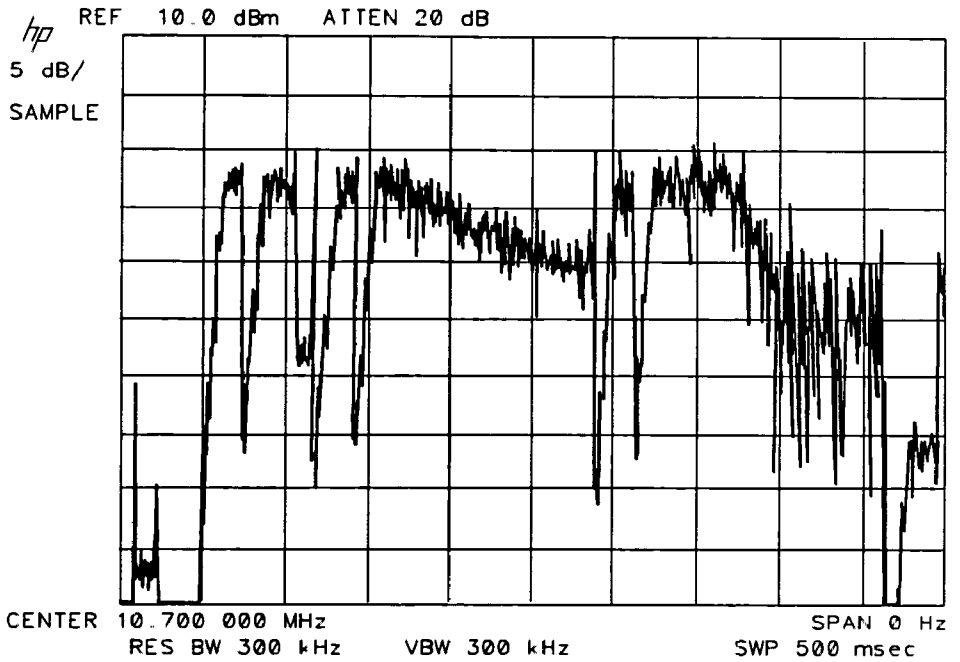

Figure 9-10. Noise with Correct Shape

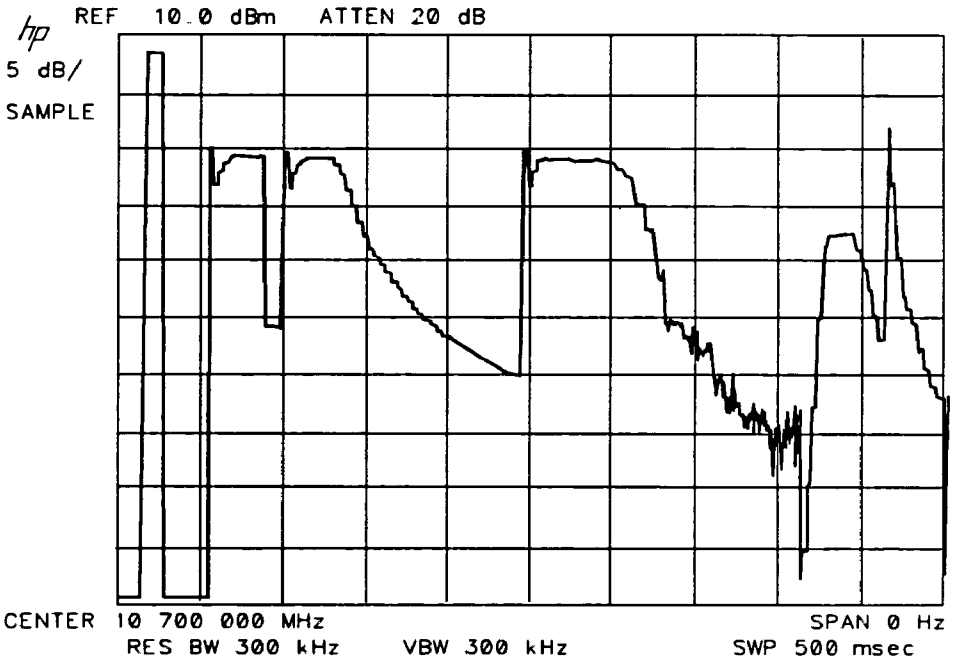

Figure 9-11. Region B Amplitude Variation

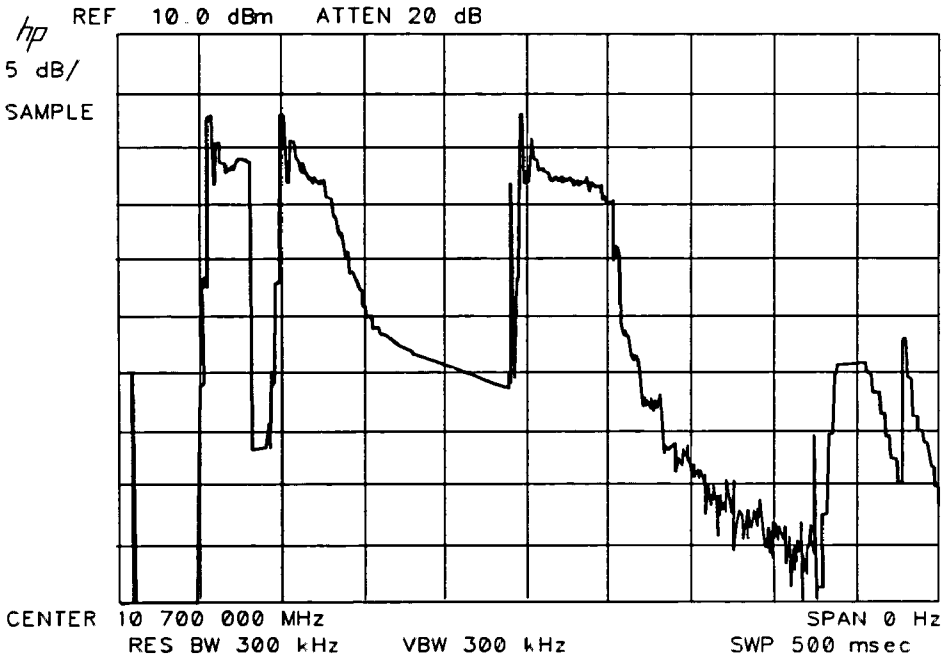

Figure 9-12. Region B Amplitude Offset

1 MHz Resolution BW Problems

Check the crystal shorting switches as follows:

1. On the HP 8562A/B press (PRESET) and set the controls as follows:

   RES BW ..... 1 MHz
   SPAN ..... 500 kHz
   Center Frequency ..... 300 MHz

2. On the HP 8562A/B connect the 300 MHz CAL OUTPUT to the INPUT 50Ω.
3. If the trace flatness is not within 2.5 dB a failure probably exists.
4. A trace similar to Figure 9-13 indicates a crystal short failure.
5. Change the HP 8562A/B SPAN to 3 MHz. A trace that slopes across the screen (see Figure 9-14) indicates a failed LC pole. To isolate the broken pole refer to the shape factor information in "30 kHz Resolution BW Problems."

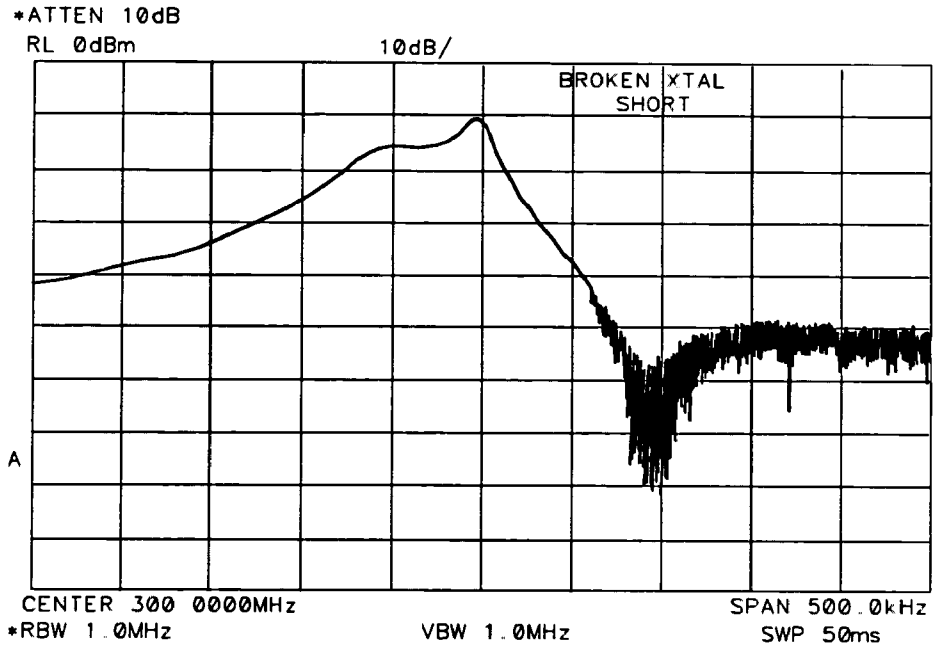

Figure 9-13. Faulty Crystal Short

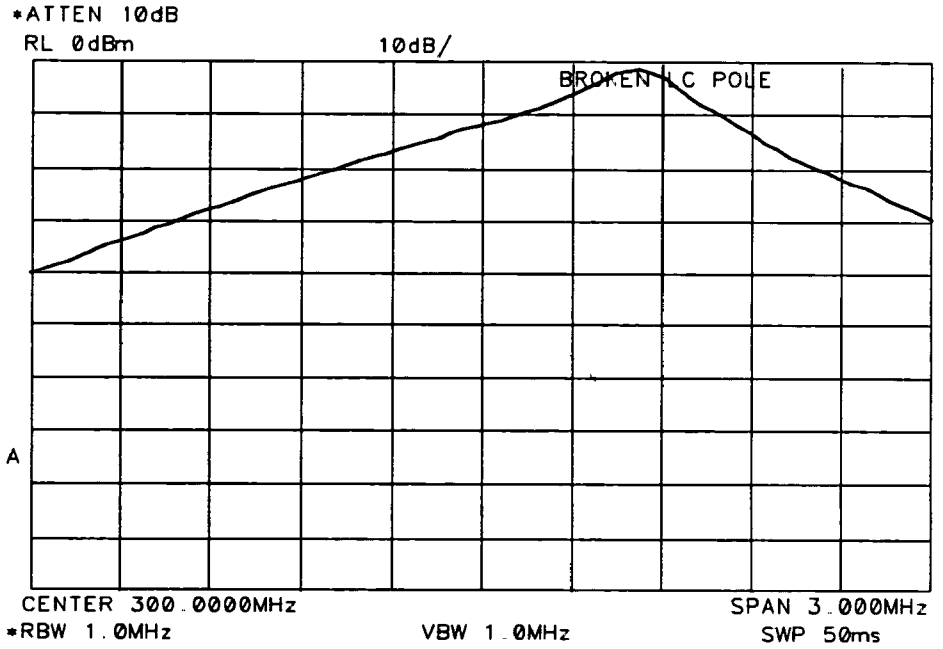

Figure 9-14. Faulty LC Pole

30 kHz Resolution BW Problems

Shape Factor Too High: Shape factor is the ratio of the 60 dB bandwidth to the 3 dB bandwidth. Shape factor should be less than 15:1. If one of the LC poles malfunctions, the shape factor may be the only indication of the failure. Isolate the non-functioning pole with the IF signature. Region E of Figure 9-8 illustrates the four LC pole adjustments. Take several signatures to examine the LC pole adjustments. If one of the four sections of Region E is consistently longer than the others, the corresponding LC pole is faulty.

IF Gain Compression: FET transistors Q301, Q303, Q700, and Q701 can deteriorate with age. Measuring less than zero volts on the FET's source indicates a bad FET.

Bandwidth Too Wide: Check for contamination on the printed-circuit board.

3 kHz and 10 kHz Resolution BW Problems

Asymmetric Filter Response: Check the crystal symmetry control with the following steps.

1. Set the HP 8562A/B to the following settings:

   RES BW ..... 3 kHz
   SPAN ..... 100 kHz

2. On the HP 8562A/B connect the 300 MHz CAL OUTPUT to the INPUT 50Ω.
3. A trace similar to Figure 9-15 indicates a failed crystal symmetry circuit.

Narrow 10 kHz Resolution BW: Check for printed-circuit board contamination.

IF Gain Compression in 10 kHz Resolution BW: FET transistors Q202, Q203, Q501, and Q503 can deteriorate with age. Measuring less than zero volts on the FET's source indicates a bad FET.

100 Hz Resolution BW Problems

Use the following steps to check high noise floor problems with the A5 Assembly's shields on.

1. Disconnect the W29 (violet) cable from A5J3.
2. Set the HP 8562A/B to the following settings:

   SPAN ..... 10 kHz
   CENTER FREQ ..... 300 MHz

3. On the HP 8562A/B press (MKR ON).
4. If the marker amplitude is greater than −90 dBm, suspect a failure in the LC34_SHORT signal path.

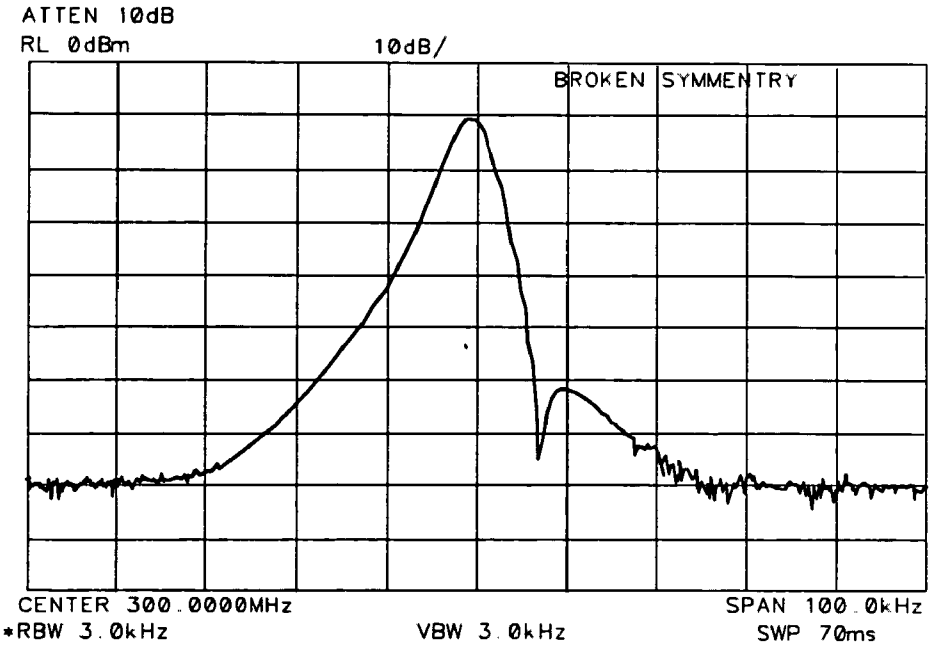

Figure 9-15. Faulty Crystal Symmetry

Step Gains

See Function Blocks B, H, and I of A5 IF Filter Schematic Diagram (Sheets 2 of 4 and 3 of 4).

1. On the HP 8562A/B press (PRESET), (SPAN), ZERO SPAN, FREQUENCY, (1), and (GHz).
2. Disconnect W29 (violet) from A5J3 and W27 (orange) from A5J5.
3. Inject a −5 dBm, 10.7 MHz signal into A5J3.
4. Monitor the output of A5J5 with another spectrum analyzer.
5. Simultaneously decrease the signal generator's output and HP 8562A/B's REF LVL in 10 dB steps.
6. At each step, the signal displayed on the other spectrum analyzer should be close to +10 dBm. (More subtle IF gain problems might require smaller signal generator and REF LVL steps.)

A16 Cal Oscillator Assembly

The A16 Calibration Oscillator supplies the stimulus signal for Automatic IF adjustments. Normally, the oscillator operates only during retrace (for a few milliseconds) to adjust part of the IF. (All IF parameters will be re-adjusted approximately every five minutes.) With continuous IF adjust ON, a group of IF parameters are adjusted during each retrace period (non-disruptive). IF continuous IF adjust is OFF, the most recent IF calibration data will be used.

The IF parameters adjusted include step gains, log amplifier gain and offset, bandwidth centering, 3 dB bandwidth, bandwidth amplitude, and crystal-filter symmetry.

A16's provides three output frequencies (all −35 dBm):

- 10.7 MHz
- 9.9 to 11.5 MHz in 100 kHz steps
- Frequency sweeps from 20 kHz to 700 Hz centered at 10.7 MHz (lasting 5 to 60 ms respectively)

The purpose of these signals is:

- Adjust gains, log amps, and video slopes and offsets.
- Adjust 3 dB bandwidth and center frequencies of LC resolution BW filters (30 kHz through 1 MHz).
- Adjust 3 dB bandwidth, symmetry, and gain of the crystal resolution BW filters(100 Hz through 10 kHz).

The Cal Oscillator uses a phase-locked-loop. The oscillator (Function Block B) is locked to the instrument's 10 MHz reference. The Reference Divider (Function Block C) divides the reference and presents a 100 kHz logic signal to the Phase Detector (Function Block D). The Divide by N (Function Block G) divides the oscillator output of 9.9 MHz to 11.5 MHz (by 99 to 115) resulting in a 100 kHz output to the phase detector. When the Cal. Oscillator PLL is locked, equal width, narrow positive and negative pulses occur at the phase detector's output. Since the phase detector drives a low-input impedance at the loop integrator, observe the positive pulses at A16CR5's anode and negative pulses at A16CR3's cathode.

The Loop Integrator low-pass filters the pulses and inverts the result. If the anode of CR5 is more positive (with respect to ground) than the cathode of CR3 is negative, the Loop Integrator output should saturate to approximately −13 V. Conversely, if the anode of CR5 is less positive than the cathode of CR3 is negative, the integrator should saturate to a positive voltage.

Note If error messages 581 AMPL or 582 AMPL appears, refer to error message 582 AMPL in Chapter 7 and perform the procedure provided.

1. The oscillator's output frequency should exceed 11.5 MHz if the CAL OSC TUNE line, A16U10 pin 14, exceeds +9 V. The oscillator frequency should be less than 9.9 MHz if CAL OSC TUNE is below −9 V. The oscillator will only operate when LCAL_OSC_ON is low (0 V).

2. If A16 remains locked (no error code 499 displayed) but does not have the right output level, troubleshoot the A16 Assembly's output leveling circuitry (function blocks C, D, E, F and H) or output attenuator (function block I).

Cal Oscillator Unlock at Beginning of IF Adjust

1. Turn the HP 8562A/B LINE switch OFF and then ON. The words IF ADJUST STATUS will appear on the display ten seconds after the instrument is turned on (assuming the rest of the instrument is working correctly). Immediately observe the lower right corner of the display for error messages. If the message ERR 499 CAL UNLK appears (before errors ERR 561, 562 and 565), the Cal Osc is unable to phase-lock. Expect to see the ERR 499 message for only about one second.
2. If the HP 8562A/B registers an unlocked Cal oscillator, continue with step 3 to verify the presence of externally supplied signals.
3. Check A16U13 pin 9 for a 100 kHz TTL-level square wave verifying operation of U13, Q3, and the 10 MHz input signal from J1.
4. Check the +15 VF, +5 VF and −15 V power supplies, and +10 V reference on the A16 Assembly.
5. Check that A16U3 pin 5 (LCAL_OSC_ON) becomes TTL low (0 V) at the start of a FULL IF ADJ (press (AMPLITUDE), MORE, IF ADJUST, and FULL IF ADJ). The phase modulation output at A16U10 pin 8 should also remain at zero volts. If these checks are correct, troubleshoot blocks A, B, G, and J. See Figure 9-25, A16 Cal Oscillator Block Diagram.

Inadequate CAL OSC AMPTD Range (A16R32)

See Function Block E of A16 Cal Oscillator Schematic Diagram.

1. If A16R32, CAL OSC AMPTD, has inadequate range to perform the IF Amplitude Adjustment, press (AMPLITUDE), MORE, and IF ADJUST.
2. Rotate R32 fully clockwise and disconnect W30 (white) from A5J4.
3. Connect W30 to the input of a second spectrum analyzer.
4. Set the other spectrum analyzer to the following settings:

   Center Frequency ..... 10.7 MHz
   Reference Level ..... −30 dBm

5. Observe the spectrum analyzer display while pressing FULL IF ADJ on the HP 8562A/B. The signal level should be above −34.55 dBm. If the signal level is incorrect, continue with step 7.
6. Rotate R32 fully counterclockwise. The signal should be below −36.25 dBm. If the signal level is correct at both settings, troubleshoot the A5 IF Assembly. If the signal level is incorrect, continue with step 7.
7. Troubleshoot the Assembly's ALC loop with the following steps:
   a. Connect a DVM's positive probe to A16J4 pin 4.
   b. On the HP 8562A/B press (AMPLITUDE), MORE, and IF ADJUST.

c. Press FULL IF ADJUST. Observe the DVM reading between the displayed messages IF ADJUST STATUS: 300 kHz RBW and IF ADJUST STATUS: 3 kHz RBW. During this time period, the voltage should be within a 2 to 10 V dc range.
d. Observe the DVM reading while IF ADJUST STATUS: AMPLITUDE is displayed. The reading should be within the 2 to 10 V dc range during.
e. If the DVM reading is outside the range in step c but inside the range in step d, suspect one of the filter's reactive components.

8. If the ALC loop is working correctly (J4 pin 4 within the test tolerances given), then either the Output Attenuator is defective, or U5B pin 5 (in ALC Loop Integrator) is outside of its +3 to +6 V dc range.

100 Hz to 3 kHz RES BW Out of Specification

1. If the 3 dB bandwidth of one of these filters is incorrect, suspect a failure of one of the five available sweeps from A16's sweep generator (Function Block L). These sweeps are generated by changing the switch settings of U7 which routes signals through U11 and U12.
2. Disconnect W30 (white) from A16J2.
3. Connect the source connection of a 3 dB power splitter to A16J2. (Minicircuits Model: ZSC J-2-1) Connect one output of the power splitter to the input of an HP 8566A/B Spectrum Analyzer. Connect the other output of the power splitter to cable W30 (white).

Note

If a 3 dB power splitter is not available, an SMB tee and an active probe may be substituted. Connect the active probe between the tee and the other spectrum analyzer. The absolute power levels will be approximately 3 dB higher than those stated below due to the elimination of the 3 dB power splitter.

4. Press (INSTR PRESET) on the HP 8566A/B and set the controls to the following settings:

Center Frequency	10.8 MHz
Span	0 Hz
Reference Level	−43 dBm
Resolution BW	100 kHz
Video BW	10 kHz
Sweep time	50 ms
Scale	1 dB/div
Sweep	SINGLE

5. On the HP 8562A/B press (PRESET), (AMPLITUDE), MORE, and IF ADJUST.
6. Press FULL IF ADJ. When the display reads ADJUSTING IF: 10 kHz RBW, press (SINGLE) on the HP 8566A/B.
7. The HP 8566A/B screen illustrates frequency verses time of the A16's output sweeps. See Figure 9-16. The slope of the HP 8566A/B's 100 kHz RBW is used to detect frequency changes. Sweeps which vary (>30%) from the normal trigger error code 581 or 582.
8. Press FULL IF ADJ. When the display reads ADJUSTING IF: 3 kHz, press (SINGLE) on the HP 8566A/B.

9. Figure 9-17 illustrates normal operation. Severe failures (slope error >30%) and subtle 3 kHz Resolution Bandwidth errors (<30%) indicate a problem with A16U7, U11, and U12.

10. Severe failure of the bandwidth accompanied by subtle errors in the A16 output signal indicate an A5 failure.

11. Set the HP 8566A/B to the following settings:

    Resolution BW ..... 10 kHz
    Video BW ..... 1 kHz
    Sweep time ..... 200 ms

12. On the HP 8562A/B, press **FULL IF ADJ**. When the message **IF ADJUST STATUS: 1 kHz RBW** appears, press (SINGLE) on the HP 8566A/B.

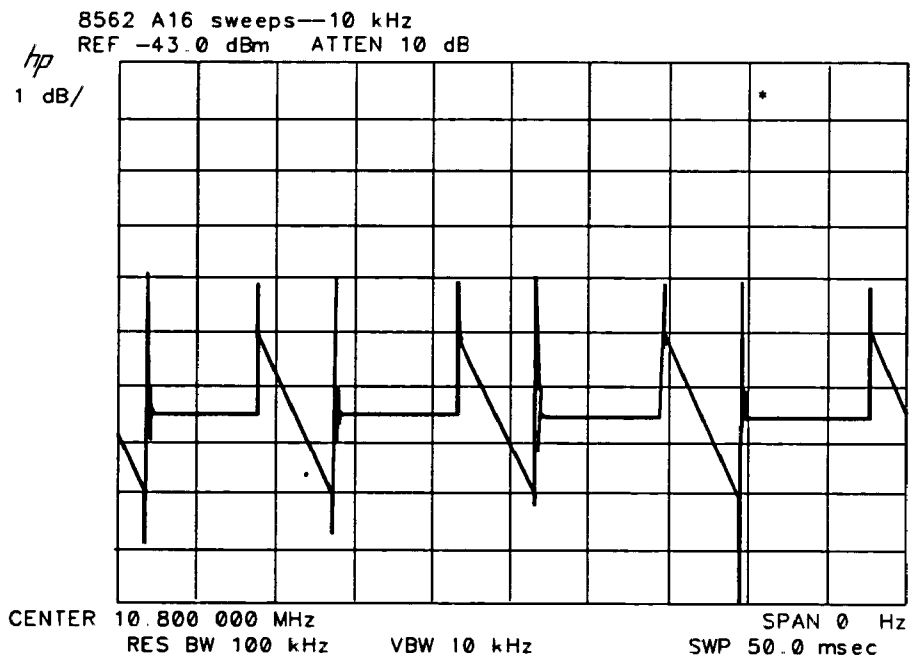

Figure 9-16. Output Waveform, 10 kHz RBW

03562-60089
5258-7013

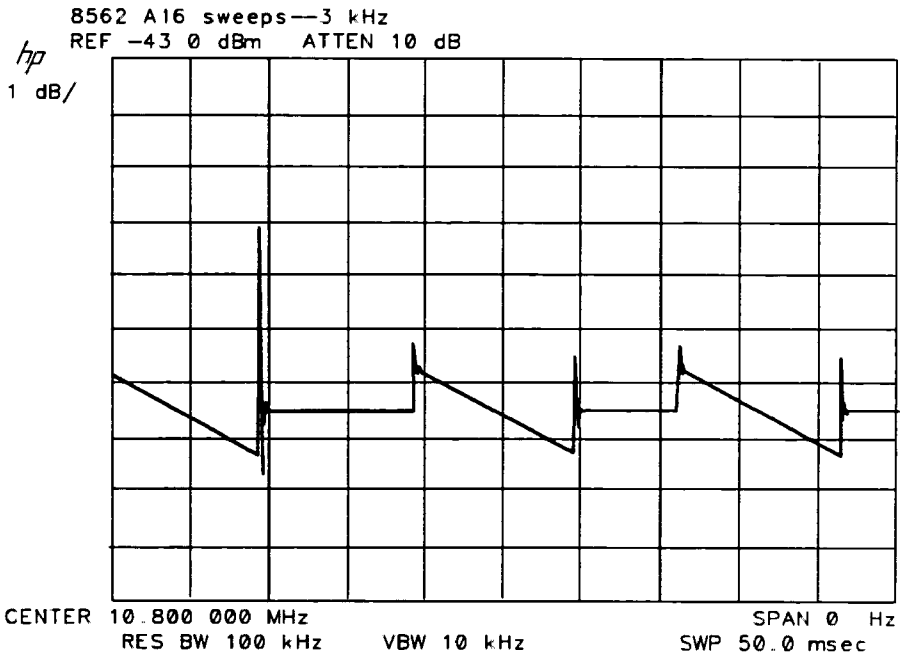

Figure 9-17. Output Waveform, 3 kHz RBW

13. Figure 9-18 illustrates normal operation. Severe failures (slope error >30%) and subtle 3 kHz Resolution Bandwidth errors (<30%) indicate a problem with A16U7, U11, and U12.
14. On the HP 8562A/B, press **FULL IF ADJ**. When the message IF ADJUST STATUS: 300 Hz RBW appears, press (SINGLE) on the HP 8566A/B.
15. Figure 9-19 illustrates normal operation. Severe failures (slope error >30%) and 3 kHz Resolution Bandwidth errors (<30%) indicate a problem with A16U7, U11, and U12.
16. On the HP 8562A/B, press **FULL IF ADJ**. When the message IF ADJUST STATUS 100-Hz RBW appears, press (SINGLE) on the HP 8566A/B.
17. Severe failures (slope error >30%) and subtle 3 kHz Resolution Bandwidth errors (<30%) indicate a problem with A16U6, U7, U8, U11, U12, and CR12. A display resembling Figure 9-20 indicates a failed A5 Assembly crystal set if the 100 Hz bandwidth is too wide

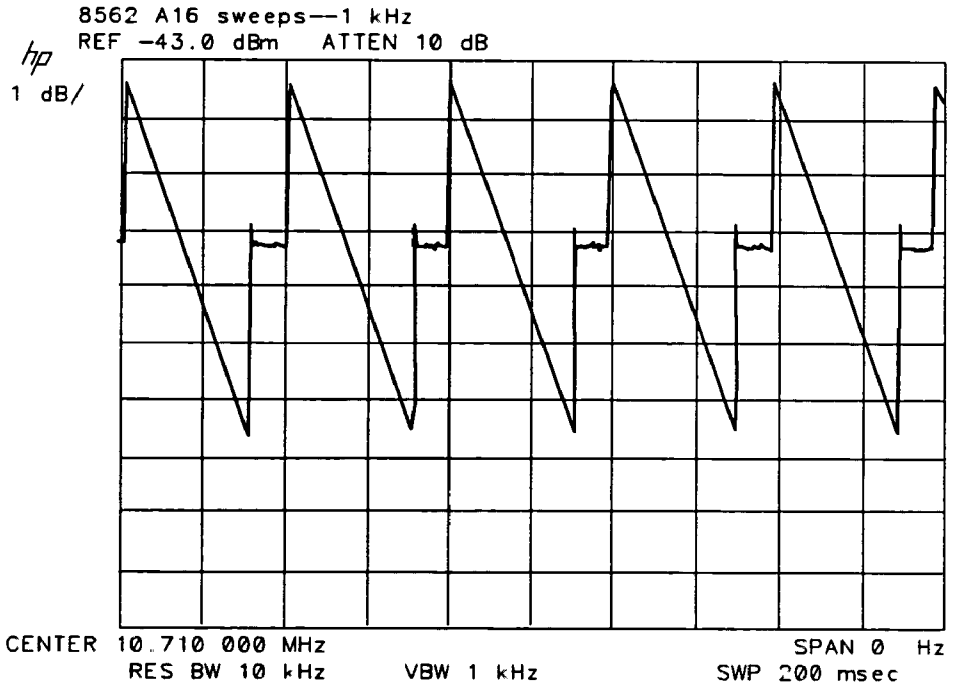

Figure 9-18. Output Waveform, 1 kHz RBW

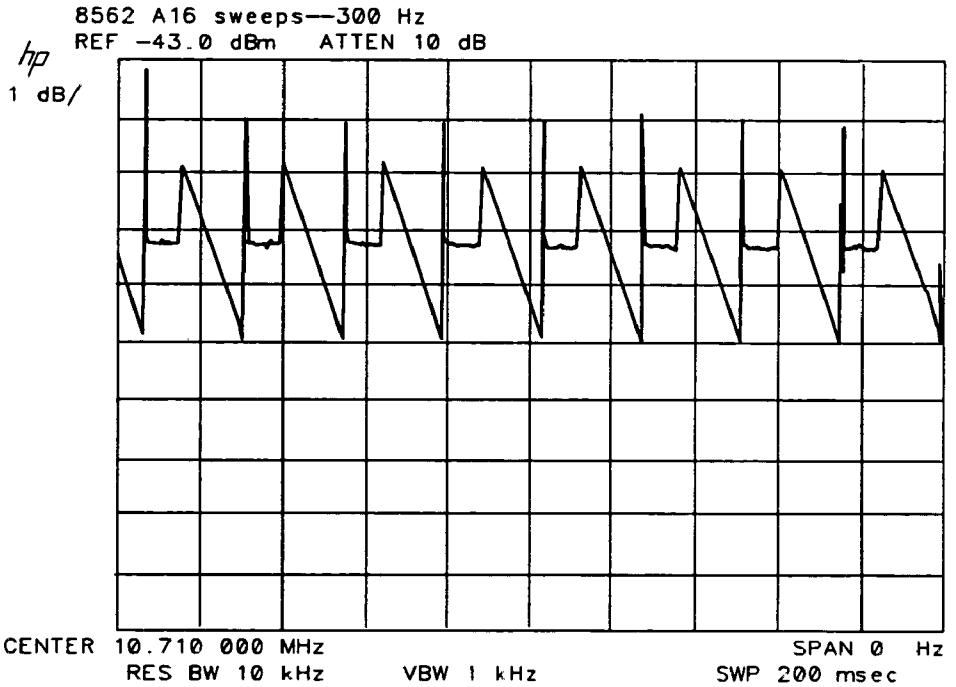

Figure 9-19. Output Waveform, 300 Hz RBW

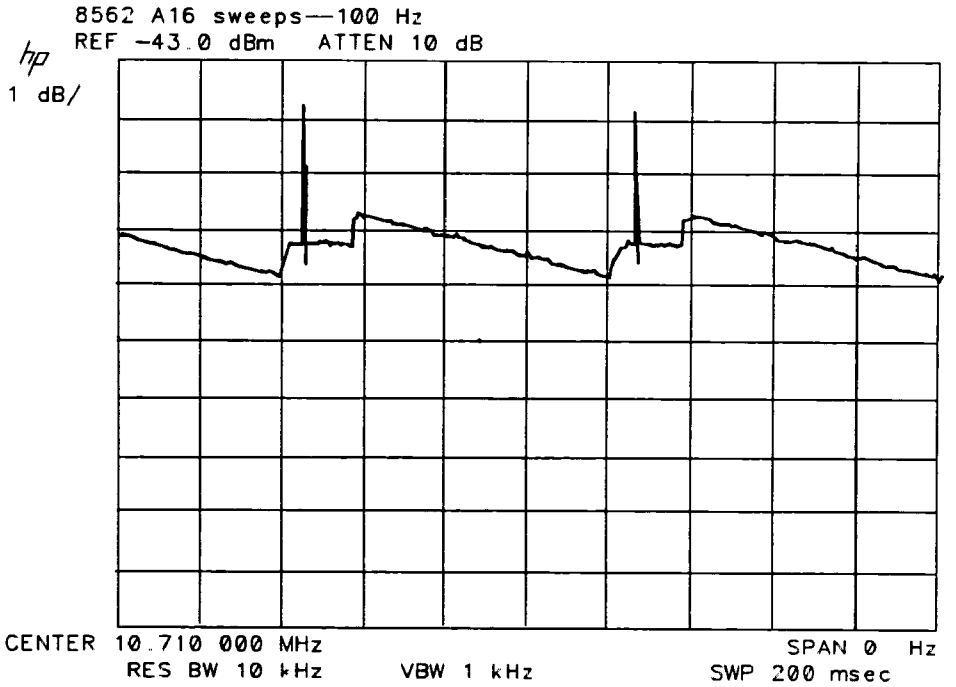

Figure 9-20. Failed Crystal Set Symptoms

Low Pass Filter

See Function Block D of A16 Cal Oscillator Schematic Diagram.

1. Connect a DVM's positive probe to A16J4 pin 4.
2. On the HP 8562A/B press (AMPLITUDE), **MORE**, and **IF ADJUST**.
3. Press **FULL IF ADJUST**. Observe the DVM reading between the displayed messages **IF ADJUST STATUS: 300 kHz RBW** and **IF ADJUST STATUS: 3 kHz RBW**. During this time period, the voltage should be within a 2 to 10 V dc range.
4. Observe the DVM reading while **IF ADJUST STATUS: AMPLITUDE** is displayed. The reading should be within the 2 to 10 V dc range during.
5. If the DVM reading is outside the range in step 3 but inside the range in step 4, suspect one of the filter's reactive components.

Sweep Generator

See Function Block L of A16 Cal Oscillator Schematic Diagram.

A properly operating sweep generator generates a series of negatively-going parabolas. Before the sweep, switches U9B and U9D turn on, shorting C15 and C14 (the output is at zero volts). These switches open to start the sweep. The output of U10A, pin 1, is 0.35 V to 10 V, depending on the sweep width selected by U7A and U9A. This voltage appears across R31. Capacitor C15 integrates the current through R31. The output of U10B is a straight, negative-going ramp. Capacitor C14 and resistor R25 integrate the output of U10A which starts a negative ramp (U10C) at the beginning of the sweep. The ramp from U10B is

added to the current in R25 via U7B. Integrating this ramp results in the parabolic output waveform.

AM/FM Demodulation, Audio Amplifier, and Speaker

See Function Blocks M and N of A16 Cal Oscillator Schematic Diagram.

1. Set an AM signal generator to the following settings:

   Frequency ..... 100 MHz
   Amplitude ..... −6 dBm
   Modulation Type ..... 80% AM
   Modulation Frequency ..... 400 Hz

2. Set the HP 8562A/B to the following settings:

   CENTER FREQ ..... 100 MHz
   SPAN ..... 0 Hz
   SWEEP TIME ..... 50 ms
   REF LVL ..... 0 dBm
   RES BW ..... 10 kHz
   SCALE ..... LINEAR

3. Adjust the HP 8562A/B's reference level and center frequency to display the 400 Hz modulation frequency eight divisions peak-to-peak.
4. On the HP 8562A/B press (DEMOD), AM DEMOD ON, and set the sweep time to five seconds.
5. On the HP 8562A/B press (DEMOD), MORE, and VOLUME.
6. Vary the volume setting and listen for the variation in speaker output level. Sixteen settings with about 3 dB spacing between settings should be available. Clipping is normal on the highest settings.
7. If the audio is not working correctly, disconnect the cable W28 connecting the audio signal from A4 to A16 at A4J5.
8. Monitor the signal at A4J5 with an oscilloscope. The signal should be 190 mV RMS ±25%. If the signal measures outside these limits, troubleshoot the A4 Assembly.
9. If the signal is correct, troubleshoot W28, the loudspeaker/cable, and the A16 Assembly.

LOG AMPLIFIER BLOCK DIAGRAM

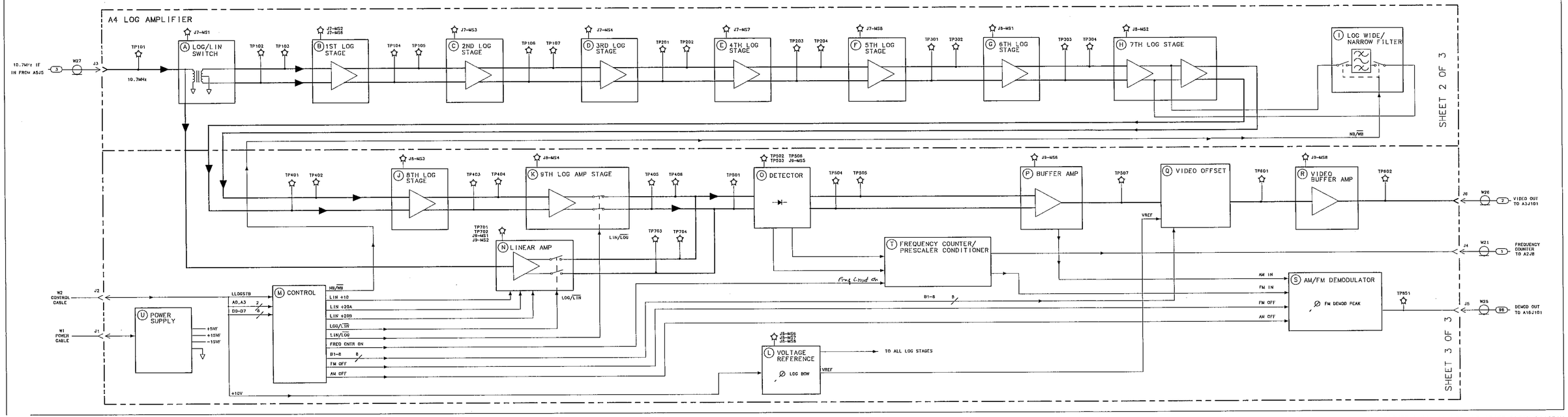

FIGURE 9-21. A4 LOG AMPLIFIER BLOCK DIAGRAM

IF ASSEMBLY BLOCK DIAGRAM

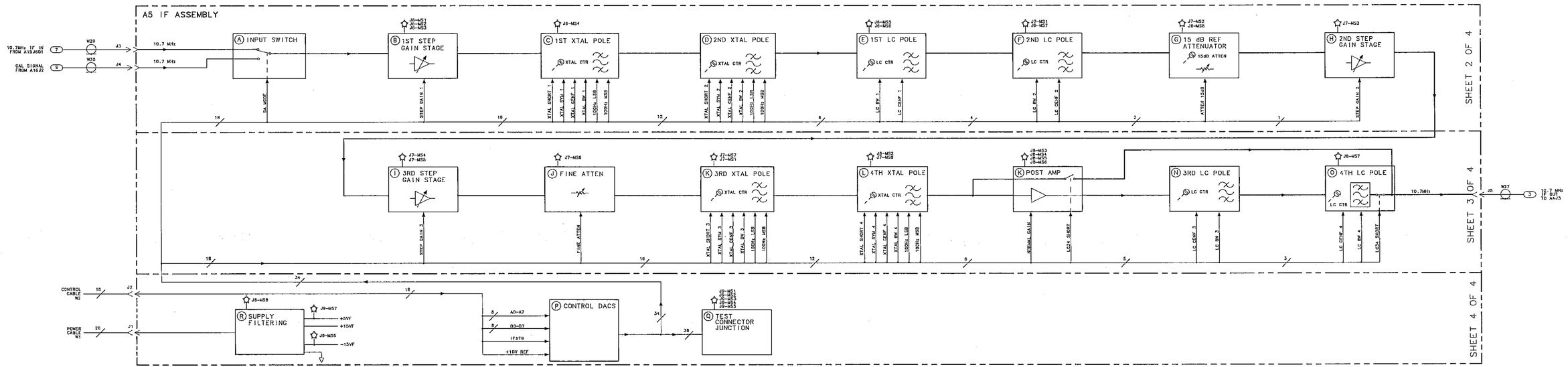

FIGURE 9-22. A5 IF ASSEMBLY BLOCK DIAGRAM

CAL OSCILLATOR BLOCK DIAGRAM

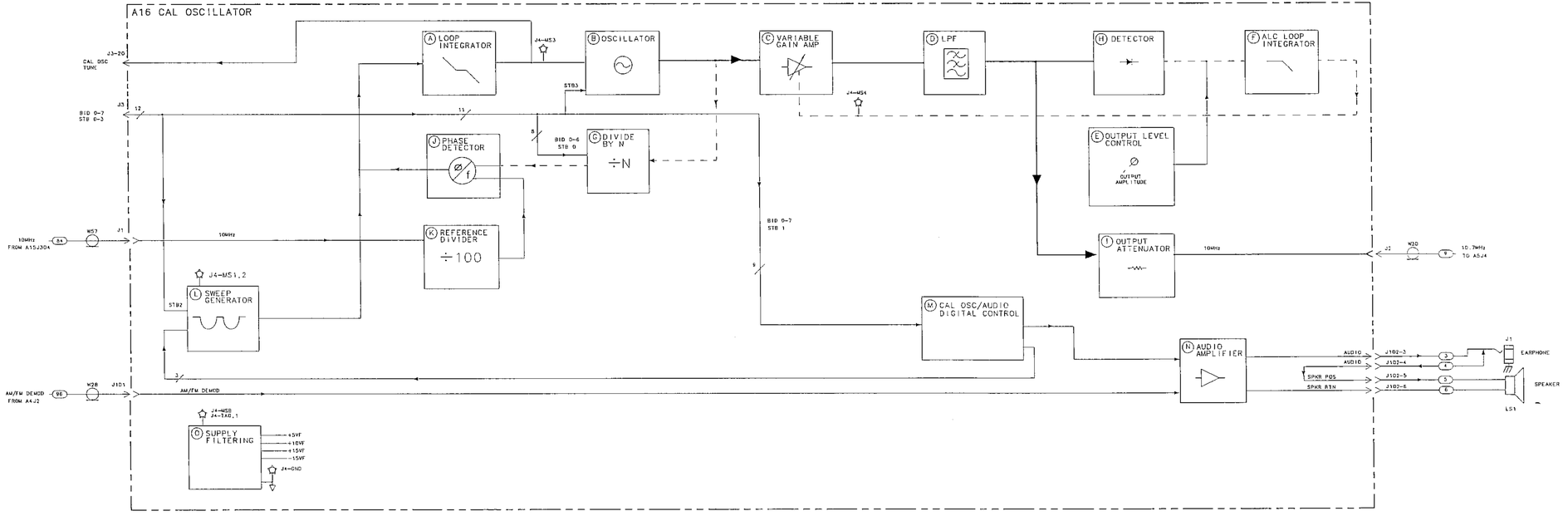

FIGURE 9-23. A16 CAL OSCILLLATOR BLOCK DIAGRAM

10

Controller Section

The Controller Section includes the A2 Controller Assembly, A19 HP-IB Assembly, and BT1 Battery. The presence of a display (graticule and annotation) verifies that most of A2 Controller Assembly is operating properly. For schematics, component-locations, and replaceable parts lists for these boards, see the *HP 8562A/B Component-Level Information* manual.

	Page
Troubleshooting Using the TAM	10-2
Blank Display	10-2
Digital Signature Analysis (DSA)	10-4
Display Problems	10-4
Line Generators	10-4
Blanking	10-5
Display Jumbled or Trace Off Screen	10-7
Intensity	10-9
Bad Characters or Graticule	10-10
Long Lines Dimmer Than Short Lines	10-10
Analog Zero-Span Problems	10-12
Frequency-Count Marker Problems	10-13
Frequency Counter	10-13
State and Trace Storage Problems	10-14
Keyboard Problems	10-15

Note

When measuring voltages or waveforms, make ground connections to A2TP3. The metal board-standoffs are not grounded and should not be used when taking measurements.

Troubleshooting Using the TAM

Table 10-1 lists assembly test connectors associated with each Manual Probe Troubleshooting test. Figure 10-1 illustrates the location of A2's test connectors.

Table 10-1. TAM Tests Versus Test Connectors

Connector	Manual Probe Troubleshooting Test	Measured Signal Lines
A2J11	ADC/MUX Test	MS1, MS3 through MS6, MS8
	DAC Test	MS2, MS7, OS1
A2J201	10 Volt Reference Test	MS4
	Switch Drive Test	MS8
	Buffered X & Y DAC Outputs	MS2, MS7
	X Line Gen Test	MS6
	Y Line Gen Test	MS1
	Intensity Offset Output	MS3
A2J202	Revision	MS1
	X, Y, & Z Output Offset	MS3, MS4, MS7
	X Output Amplifier	MS3
	Y Output Amplifier	MS7
	Blanking Test	MS8
	Focus DAC Test	MS2

Blank Display

Use the following procedure if the instrument's display is blank. This procedure substitutes an HP-IB printer for the display.

1. Connect the printer to the HP 8562A/B and set the printer's address to the value required by the TAM. This is usually 1.
2. All of the power-supply indicator LEDs along the edge of the A2 Controller Assembly should be lit.
3. The rear-panel CRT +110 V dc ON indicator should also be lit.
4. Connect the TAM's probe cable to A2J11.
5. Press (MODULE), SOFT KEY #3, (STEP DOWN), SOFT KEY #1. (The top soft key is #1.)
6. The yellow LED next to A2J11 should blink approximately ten times. If the LED fails to blink correctly, troubleshoot the digital section of the A2 Controller Assembly.
7. Move the probe cable to A2J202. Press SOFT KEY #1 and wait five seconds.
8. Press SOFT KEY #4. The results should be sent to the printer.
9. Move the probe cable to A2J201, press SOFT KEY #1 and wait five seconds.

A2
CONTROLLER

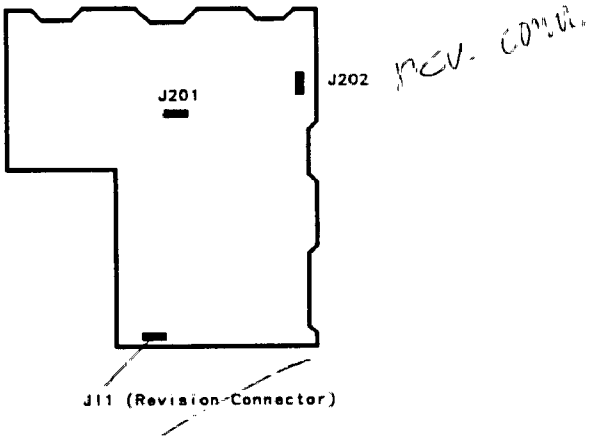

Figure 10-1. A2 Test Connectors

10. Press SOFT KEY #4. The results will be sent to the printer.
11. If a failure is indicated in any of these tests, the fault lies on the A2 Controller Assembly. To obtain more information:
    a. Press the down arrow key one less time than the test number. (For example, press it twice for the third test on the list.)
    b. Press SOFT KEY #3, then SOFT KEY #4, and when the printout is complete, SOFT KEY #6.
12. If no failures were indicated in testing the A2 Controller, move the probe cable to A17J4.
13. Press SOFT KEY #1 and wait five seconds.
14. Press SOFT KEY #4. The results will be sent to the printer.
15. If no failure is indicated in the printout, refer to "High Voltage Supplies" in Chapter 13.

Digital Signature Analysis (DSA)

Digital Signature Analysis (DSA) places microprocessor, A2U1, in a simplified known state. This simplified state consists of placing a one-word instruction, MOVE QUICK, (0111 XX10 XXXX XXX0) on the data bus. The microprocessor cycles through its address range continually reading the instruction. Perform the following DSA procedure to test the operation of microprocessor, A2U1:

1. Set the HP 8562A/B's **LINE** switch off.
2. Move the DSA jumper (located in the middle of the A2 Assembly) from connecting E6 and E7 to connecting E5 and E6.
3. Remove jumper A2E1. A2E1 is a 16 pin dual-in-line package located in the middle of the A2 Assembly. Set the HP 8562A/B's **LINE** switch on.
4. Use an oscilloscope to confirm that address lines, address strobe, and chip selects are toggling at proper levels.
5. Use an oscilloscope to check the address line sequencing. The signal on each line (starting with A1 and ending with A23) should be one-half the frequency of the previous line.
6. If step 4 reveals problems, microprocessor A2U1 is probably faulty.
7. Set the HP 8562A/B's **LINE** switch off. Replace jumper A2E1. Move the DSA jumper from connecting E5 and E6 to connecting E6 and E7.

Display Problems

Line Generators

See Function Blocks D and I of A2 Controller Schematic Diagram (Sheet 2 of 5).

The line generators convert the digital display information to an analog output suitable to drive the A17 CRT Driver Assembly. These circuits change the digital words into vectors, or lines, which move the beam of the CRT. The vectors are each 6 μs long (width of the INTEGRATE pulse) followed by a 1 μs SAMPLE pulse. When characters of text are being drawn, the vectors are 3 μs long.

1. On the HP 8562A/B press (PRESET), (RECALL), and **MORE**. If the display is blank press the bottom softkey).
2. On the HP 8562A/B, press **CRT ADJ PATTERN**. If the display is blank, press the third softkey.
3. Set an oscilloscope to the following settings:

   Amplitude scale ..... 3 V/div
   Sweep time ..... 1 ms/div
   Triggering ..... External

4. Externally trigger the oscilloscope off the signal at A2U207 pin 8 (LBRIGHT).

5. Compare the signals at the following test points with those illustrated in Figure 10-2.

   X POS: A2J202 pin 14
   Y POS: A2J202 pin 3
   Z OUT: A2J201 pin 3
   BLANKING: A2J202 pin 15

Note

Waveforms displayed on an analog scope may show considerably more spikes. This is normal and is due to the wider displayed bandwidth.

6. Troubleshoot the circuits associated with any bad waveforms.

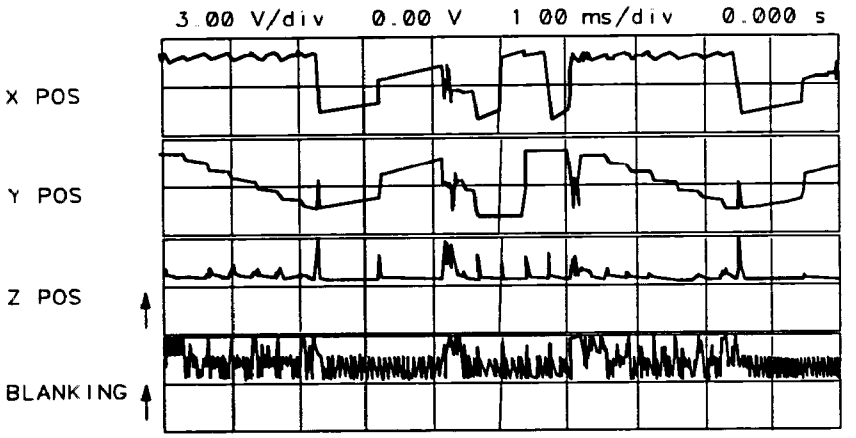

Figure 10-2. Line Generator Output Waveforms

Blanking

See Function Block J of A2 Controller Schematic Diagram (Sheet 2 of 5).

1. Using an oscilloscope, check for blanking pulses at A2J202 pin 15. A2U206 pin 6 should be at a TTL low. Blanking pulses turn the CRT beam off during the sample time of the line generators and when moving the CRT beam to a new position for drawing the next vector.
2. Set an oscilloscope to the following settings:

   Amplitude Scale ..... 4 V/div
   Amplitude Offset ..... +2.5 V
   Sweep Time ..... 20 μs/div
   Triggering ..... External

3. Externally trigger the oscilloscope off the signal at A2U207 pin 8 (LBRIGHT).
4. Compare the blanking-circuit input signals at the following test points with those illustrated in Figure 10-3.

   BLANKING: J202 pin 15
   BLANK: U214 pin 12
   VECTOR: U214 pin 11
   U213 pin 13

5. The waveforms in Figure 10-3 must match the timing of the vectors being drawn. To do this, U215B is used to adjust the leading edge, and U215A is used to adjust the trailing edge. The first six horizontal divisions show the line drawing mode where the VECTOR pulses are 6 μs apart. The remaining divisions shows character mode (VECTOR pulses 3 μs apart). The BLANK pulses are synchronized to the VECTOR pulses by U214B. The fourth trace shows the double pulses which delay the leading and trailing edges of the blanking pulses.

6. Set the oscilloscope to the following settings to expand the first and fourth traces. This displays how the rising edges of U213-13 determine the transitions of the blanking pulses. See Figure 10-4.

Amplitude Scale	4 V/div
Amplitude Offset	+2.5 V
Sweep Time	2 μs/div
Delay from Trigger	96 μs
Triggering	External

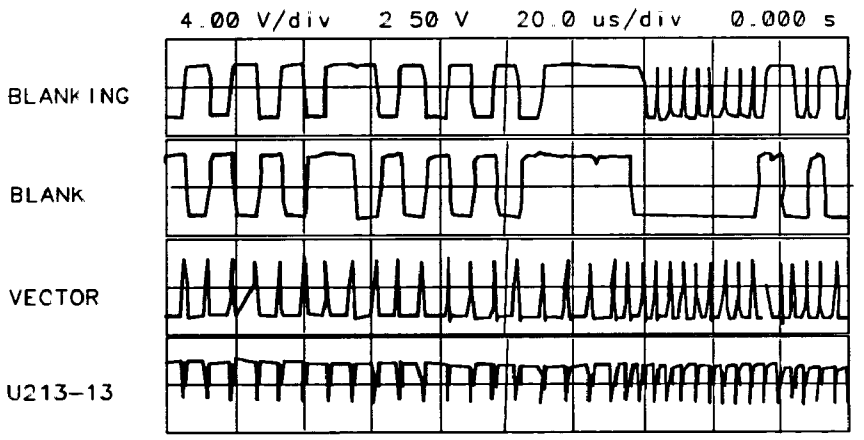

Figure 10-3. Blanking Waveforms

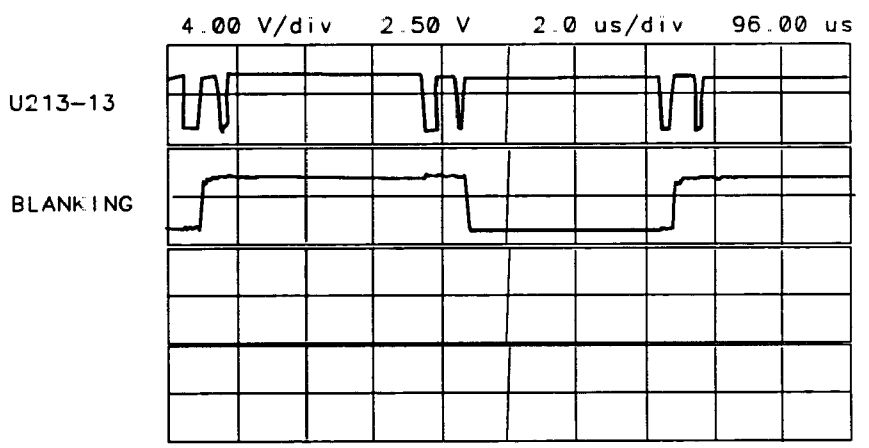

Figure 10-4. Expanded Blanking Waveforms

Display Jumbled or Trace Off Screen

See Function Blocks D and I of A2 Controller Schematic Diagram (Sheet 2 of 5).

The two line generators are identical circuits, so the following steps apply to both; references will be to the X generator with Y references in parentheses.

1. The voltage at A2U202B pin 7 should measure 10.0 V.
2. Perform steps 1 through 5 of "Line Generators" in this chapter. If the X POS and Y POS waveforms look different from those illustrated in Figure 10-2, check the waveforms at the low-pass filter's input (Function Block E).
3. The waveform at the low-pass filter should look like X POS in Figure 10-2 but have an amplitude from 0 V to +5 V.
4. If the waveform in step 3 is incorrect, set an oscilloscope to the following settings:

   Amplitude Scale ..... 10 V/div
   Sweep Time ..... 20 μs/div
   Triggering ..... External

5. Trigger the oscilloscope on the signal at U207 pin 8 (LBRIGHT).
6. Compare the line-generator input signals at the following test points with those illustrated in Figure 10-5. INTEGRATE and SAMPLE waveforms are replicas of VECTOR except for polarity and amplitude. LCHAR is low when characters are drawn.

   INTEGRATE: Q202's collector
   SAMPLE: Q201's collector
   LCHAR: U207 pin 9
   VECTOR: U213 Pin 9

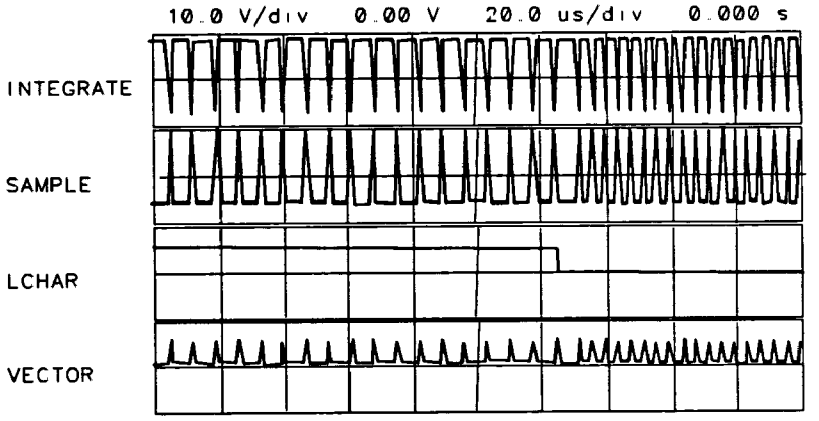

Figure 10-5. Switch Driver Waveform LCHAR

7. All of the DAC inputs should change state two or more times within a 5 ms window. If one or more DAC bits are not working correctly, this will effect the entire display, but especially in the diagonal lines that go from lower left to upper right. When these lines are drawn, both the X and Y DACs are stepped one count at a time. A "stuck" bit will distort the diagonal in a repetitive manner. The quicker the repetition, the less significant the "stuck" bit. Horizontal distortions apply to the X LINE GENERATOR DAC, while vertical distortions apply to the Y LINE GENERATOR DAC. The DACS have current

outputs so they are not readily observable with an oscilloscope. Continue with step 8 to observe the DAC outputs.

8. To break the effect of feedback in the line generators and to observe the output of the DACs, short J201 pin 13 to TP3. Continue with step 9.

9. Set an oscilloscope to the following settings:

   Amplitude Scale ..... 5 V/div
   Sweep Time ..... 1 ms/div
   Coupling ..... AC
   Triggering ..... External

10. Trigger the oscilloscope on the signal at U207 pin 8 (LBRIGHT).

11. The following waveforms should look like Figure 10-6 on the oscilloscope. The top two traces are for the X Line Generator and the bottom two traces for the Y Line Generator.

    X Line Generator
      U201 pin 1
      TP2
    Y Line Generator
      U203 pin 1
      TP1

12. Figure 10-7 illustrates the waveforms in step 11 expanded to show relative timing. the second and fourth traces are delayed by 5 ms from the first and third. The oscilloscope settings are changed as follows:

    Sweep Time ..... 20 μs/div

13. Figure 10-8 illustrates the waveforms of properly working line generators. Whenever there is a pulse on TP1 or TP2, the appropriate integrator (U201B or U203B) generates a ramp (the output vector) which feeds back to U201A (U203A) and shows on its output.

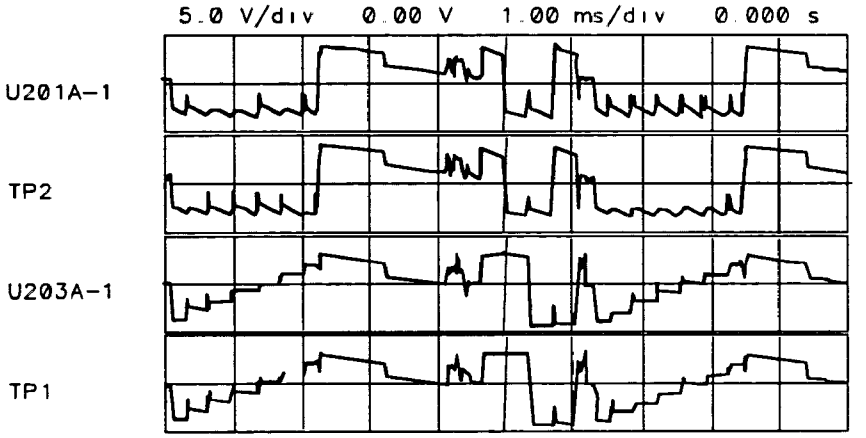

Figure 10-6. Distorted X/Y Line Generator Waveforms

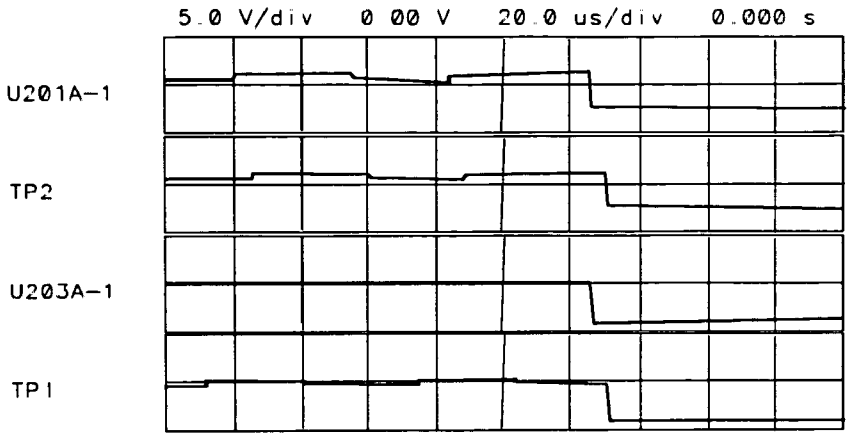

Figure 10-7. Expanded X/Y Line Generator Waveforms

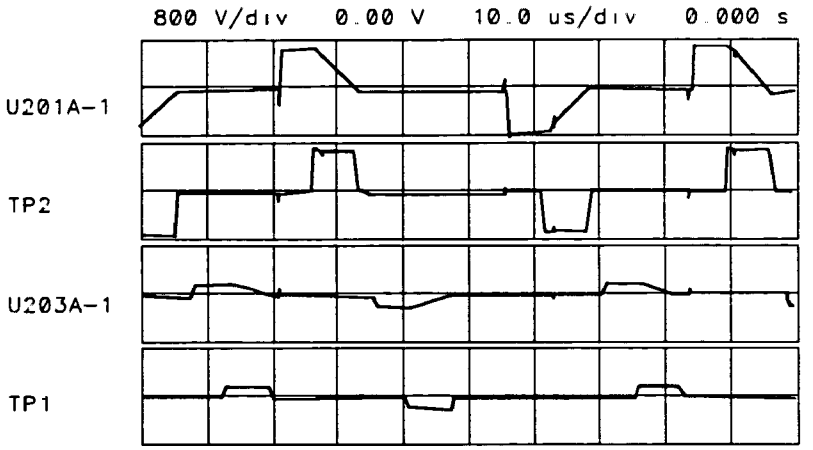

Figure 10-8. Normal X/Y Line Generator Waveforms

Intensity

1. The length of the vector being drawn can effect intensity (U210A, U210C, and U210D). Refer to "Long Lines Dimmer Than Short Lines."
2. Short A2U207 pin 2 to pin 7. If the display does not brighten, troubleshoot LBRIGHT switch, U207B. This switch intensifies trace A and active softkeys.
3. Short A2U207 pin 2 to pin 3. If the display does not brighten, troubleshoot DEF1 switch, U207A. This switch is used in analog zero-span.
4. Change the intensity (under (DISPLAY), **MORE**). If the intensity does not change, troubleshoot the intensity DAC, A2U212A. (A2U212A is controlled from the front panel.) The amplitude of the waveform at U211A pin 1 should increase or decrease with intensity changes.
5. Clamp U211B limits the voltage to about 4.2 volts. Short A2J201-1 to ground and set the intensity DAC to a number greater than 80. A major portion of the waveform should be limited to 4.2 V.

6. Troubleshoot the maximum brightness clamp, A2U211C.

Bad Characters or Graticule

If the displayed characters are bad but the graticule is correct (or if the symptoms are reversed), troubleshoot the X- and Y- generator switches A2U207D and A2U207C. Check that the switch driver signal LCHAR is working properly. Refer to "Display Jumbled or Trace Off Screen" in this chapter.

Long Lines Dimmer Than Short Lines

See Function Block M of A2 Controller Schematic Diagram (Sheet 2 of 5).

The Z Output function block contains the absolute value circuits which determine the intensity of vectors drawn on the display. The vector length is approximated by the sum of the X length and Y length. The voltage corresponding to the X length, ΔX, is converted to current by R274. (If the voltage is negative, it is amplified by 2 in A2U210C, converted to current by A2R246, and added to the current from A2R274.) This effectively turns both negative and positive voltages into positive currents, hence absolute value.

1. Short A2J201 pin 13 to ground (A2TP3).
2. Connect channel A of an oscilloscope to A2J201 pin 2. Connect channel B to A2U210D-14.
3. Set an oscilloscope to the following settings:

   Amplitude scale ..... 10 V/div
   Sweep time ..... 1 ms/div
   Triggering ..... External

4. Externally trigger the oscilloscope off the signal at A2U207 pin 8 (LBRIGHT).
5. The waveforms should look like those illustrated in Figure 10-9. If the waveform at J201 pin 2 is bad, troubleshoot the X Line Generator (Function Block D of the A2 Controller Schematic, sheet 2 of 5).
6. If the waveform at U210D pin 14 is bad, troubleshoot the Z Output circuit (Function Block M of A2 Controller Schematic, sheet 2 of 5).
7. Remove the short from J201 pin 13 to ground. Short A2J201 pin 1 to ground.

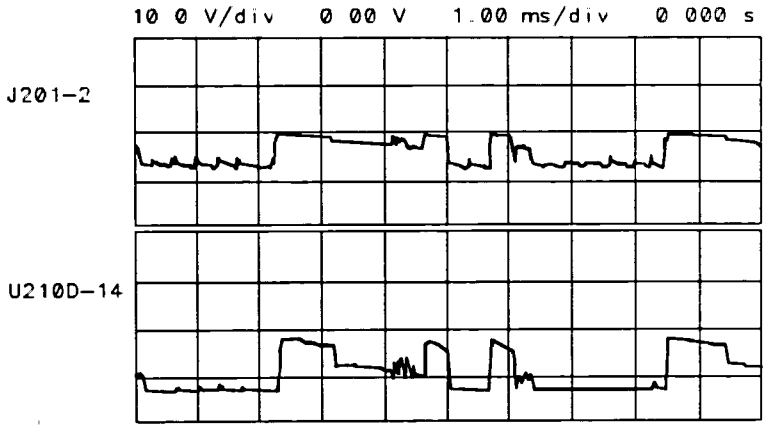

Figure 10-9. Delta X Waveform

8. Move the oscilloscope's channel A probe to J201 pin 14.
9. The waveforms should look like those illustrated in Figure 10-10. If the waveform at J201 pin 14 is bad, troubleshoot the Y Line Generator (Function Block I of A2 Controller Schematic, sheet 2 of 5).
10. If the waveform at U210D pin 14 is bad, troubleshoot the Z Output circuit (Function Block M of A2 Controller Schematic, sheet 2 of 5).

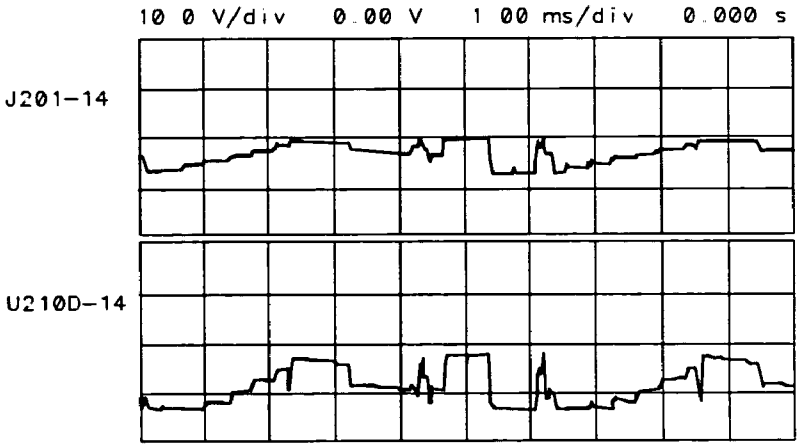

Figure 10-10. Delta Y Waveform

Analog Zero-Span Problems

1. On the HP 8562A/B press (PRESET), (SPAN), **ZERO SPAN**, (SWEEP), (1), (ms), (RECALL), **MORE**, and **CRT ADJ PATTERN**.

2. Set an oscilloscope to the following settings:

   Amplitude scale ..... 10 V/div
   Sweep time ..... 1 ms/div
   Triggering ..... External

3. Externally trigger the oscilloscope off the signal at A2U207 pin 8 (LBRIGHT).

4. The display should be similar to Figure 10-10 except that the untriggered trace should show at the left edge of the screen. In these settings, DEF1 causes switching between the line generators and the analog inputs (sweep and video). Refer to Function Block M of the A2 Controller Schematic, 2 of 5.

5. The sweep input from J1-41 should go from 0 V to +10 V; the Video In signal should go from about 0 V to 1 V for bottom to top screen. Apply a dc voltage to A2J4, Video In, to test the circuit.

   Remove jumper, exit CRT Adj. Pattern

6. In Figure 10-11, there is no synchronization between DEF1 and the video patterns X POS and Y POS when DEF1 is TTL high. The Y POS level when DEF1 is low is the Video In level.

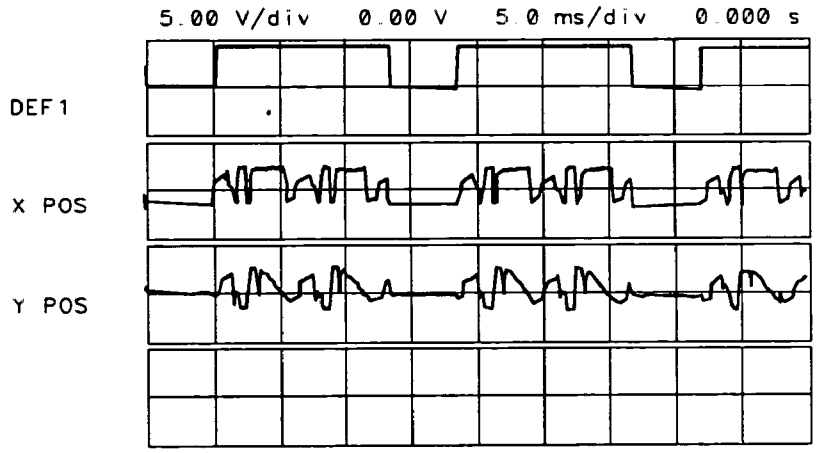

Figure 10-11. DEF1 Synchronization

Frequency-Count Marker Problems

The FREQ COUNT function works by dividing the 10.7 MHz IF signal by two (prescaling) and counting the divided-down signal using the Frequency Counter. The prescaler is on the A4 Log Amplifier Assembly. Perform the following steps to determine whether the problem is on the A4 Log Amplifier or A2 controller Assembly:

1. Disconnect W21 from A2J7.
2. Connect the output of a synthesized source, such as an HP 3335A, to A2J7.
3. Set the synthesized source to the following settings:

   Amplitude ..... +10 dBm
   Frequency ..... 5.35 MHz

4. Set the HP 8562A/B to the following settings:

   CENTER FREQ ..... 300 MHz
   SPAN ..... 1 MHz

5. On the HP 8562A/B press (FREQ COUNT). The frequency counter actually reads one half the frequency of the 10.7 MHz IF. If the CNT frequency display reads all asterisks, the frequency counter is probably at fault.
6. If a valid frequency is displayed, troubleshoot the prescaler on the A4 Log Amplifier Assembly.
7. Reconnect W21 to A2J7.

Frequency Counter

See Function Block Y of A2 Schematic Diagram (Sheet 5 of 5).

The frequency counter counts the frequency of the last IF and provides accurate signals timing for digital zero-spans. The circuit also provides timing signals to the A3 Interface assembly's ADC (Analog to Digital Converter). The nominal input frequency is 5.35 MHz (10.7 MHz divided by 2). The circuit's frequency reference is the A15 RF assembly's 10 MHz TCXO.

In the frequency count mode, U702 prescales the 10 MHz reference by 5 to generate a 2 MHz timebase. This timebase feeds through MUX U704 to programmable-timer U700's CLK2 input. Programmable-timer U700's output (OUT2) is the gating signal (HBKT_PULSE) for performing the frequency count. The gating time interval is a function of the counter resolution which may be set between 10 Hz and 1 MHz. Table 10-2 lists the Gate Time for each setting of COUNTER RES. The gate time is the period during which U511 pin 3 is high.

The FREQ COUNT input, A2J7, is gated in U511B by HBKT_PULSE. The gated signal clocks divide-by-16 counters U703A and U703B. These counters are cascaded to form a divide-by-256 counter. The MSB of this counter, CD7, clocks the CLK0 input of U700. The frequency of CD7is a function of COUNTER RES as shown in Table 10-2. If Timer U700 overflows, OUT0 will be set and U701B clocked, generating CNTOVFLIRQ, which will interrupt the CPU.

If IRQAK2 is high, HBKT_PULSE clock U701A, generating FREQCNTLIRQ. Upon receiving the FREQCNTLIRQ interrupt, the CPU latches the CD0 to CD7 onto the BID bus by setting

LCDRD (low counter data read) low and reading the counter data from the BID bus. The CPU will also read the data from the timer, U700, by setting L8254CS and LCNTLRD low, placing the timer data on the BID bus. The CPU resets U701A by setting IRQAK2 low via the BID bus and latch U506.

Table 10-2. Gate Times

Counter Res	Gate Time* (U511 pin 3 high state)	A2TP16	A2TP15
10 Hz	200 ms	2 MHz	4.18 kHz
100 Hz	20 ms	2 MHz	418 Hz
1 kHz	2 ms	2 MHz	41.8 Hz
10 kHz	2 ms	2 MHz	41.8 Hz
100 kHz	2 ms	2 MHz	41.8 Hz
1 MHz	2 ms	2 MHz	41.8 Hz
* TP15 = (FREQ COUNT input × Gate Time)/256			

1. Disconnect W22 from A2J8.
2. If a 10 MHz, TTL-level signal is not present at the end of W22 continue with step 9. If a 10 MHz signal is present at W22, proceed as follows:
   a. Reconnect W22 to A2J8.
   b. Set the HP 8562A/B to the following settings:

      SPAN ..... Zero Span
      SWEEP TIME ..... 20 ms

   c. Monitor the signal at A2J2 pin 21. This is an output of the frequency counter, HBBUCKET PULSE.
   d. If HBBUCKET PULSE is stuck high, troubleshoot the frequency counter.
3. Check for a 10 MHz signal at A15J302. If the signal is not present at A15J302, the A15 RF Assembly is probably defective.

State and Trace Storage Problems

STATE storage is in two of the six Program RAMs and TRACE storage is in the two Display RAMs. With low battery voltage, it is normal for STATEs and TRACEs to be retained if the power is off for less than one minute. If the power is left off for more than thirty minutes with low battery voltage, the stored STATEs and TRACEs will be lost. The following steps test battery backup:

1. Measure the voltage on W6 at A2J10. If the voltage is less than 3.5 V, check the BT1 battery.
2. If the battery voltage is correct, reconnect W6 to A2J10, set the analyzer's power off and wait five minutes.
3. Measure the voltage at A2U101 pin 28 and A2U102 pin 28.

4. If the voltage is less than 2.0 V dc, the RAM power battery-backup circuitry on the A2 Controller Assembly is probably at fault.

Keyboard Problems

If the analyzer does not respond to keys being pressed or the knob being rotated, the fault could be either on the A3 Interface Assembly or the A2 Controller Assembly. To isolate the A2 Controller Assembly, use the following procedure. This procedure tests the analyzer response over HP-IB and the keyboard/RPG interrupt request signal.

1. Enter and run the following BASIC program.

```
10 OUTPUT 718; "IP; SP 1 MHz;"
20 WAIT 2 ! Wait 2 seconds
30 OUTPUT 718;"AT 70 DB;"
40 WAIT 2 ! Wait 2 seconds
50 OUTPUT 718;"AT 30 DB;"
60 WAIT 2 ! Wait 2 seconds
70 OUTPUT 718;"AT 10 DB;"
80 END
```

2. When the program runs, three or four clicks should be heard. This is the A9 Input Attenuator changing attenuation value.
3. If the display shows the analyzer to be in RMT and the ATTEN value displayed on the CRT changed according to the program, the A2 Controller Assembly is working properly. Refer to Chapter 8, "ADC/Interface Section."
4. If there was no response over HP-IB, the A2 Controller is probably defective. Be sure to also check the A19 HP-IB Assembly and A19W1.
5. If there was an improper response (for example, the displayed ATTEN value changed but no clicks were heard), the A2 Controller is probably working properly.
6. Monitor A2U2 pin 2 with a logic probe for pulses while pressing a key and rotating the knob (RPG). This is the interrupt request signal for the keyboard and RPG.
7. If the interrupt request signal is always low, troubleshoot the A2 Controller Assembly.
8. If the interrupt request signal is always high, the fault is on either the A3 Interface or A1A1 Keyboard Assembly.

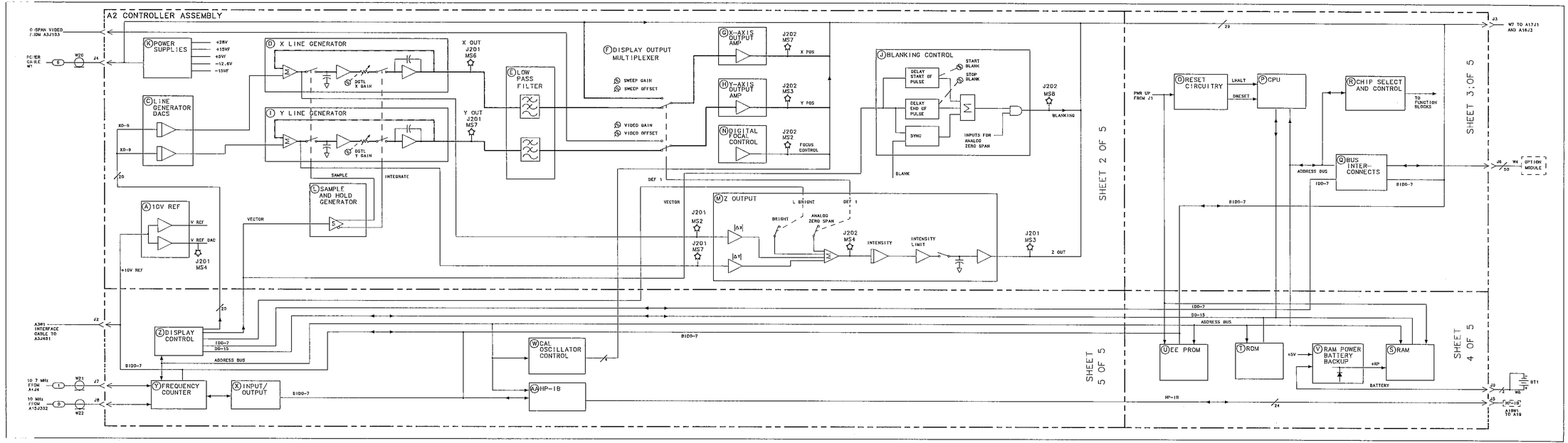

FIGURE 10-12. A2 CONTROLLER BLOCK DIAGRAM

11

Synthesizer Section

The Synthesizer Section includes the A7 First LO Distribution Amplifier, A11 YTO, and parts of the A14 Frequency Control and A15 RF assemblies. Simplified and detailed block diagrams for each assembly are located at the end of this chapter. For schematics, component-locations, and replaceable parts lists for these boards, see the *HP 8562A/B Component-Level Information* manual.

	Page
Confirming a Faulty Synthesizer Section	11-2
Troubleshooting Test Setup	11-7
Troubleshooting Using the TAM	11-8
General PLL Troubleshooting	11-13
PLL Locked at Wrong Frequency	11-13
Unlocked PLL	11-14
Frequency Span Accuracy Problems	11-15
Determining the First-LO Span	11-15
Confirming Span Problems	11-16
YTO Main Coil Span Problems (LO Spans >20 MHz)	11-16
YTO FM Coil Span Problems (LO Spans 1.01 MHz to 20 MHz	11-17
Roller Oscillator Span Problems (LO Spans ≤1 MHz)	11-18
First LO Span Problems (All Spans)	11-21
First LO Span Problems (Multiband Sweeps)	11-22
Unlocked YTO PLL	11-23
Operation	11-23
Troubleshooting an Unlocked YTO PLL	11-25
Unlocked Roller Oscillator PLL	11-31
Operation	11-31
Confirming an Unlocked Condition	11-31
Offset Oscillator PLL	11-32
Transfer Oscillator PLL	11-34
Main Oscillator PLL	11-35
Unlocked Offset PLL (Sampling Oscillator)	11-37
Operation	11-37
Troubleshooting	11-37
Unlocked Reference PLL	11-40
Operation	11-40
Troubleshooting	11-40
Third LO Driver Amplifier	11-42
Sampler and Sampler IF	11-43
Sweep Generator Circuit	11-44

Caution Many of the assemblies are extremely sensitive to Electrostatic Discharge (ESD). For further information regarding electrostatic cautions, refer to "Electrostatic Discharge Information" in Chapter 1.

Caution Use of an active probe, such as an HP 1120A, with a spectrum analyzer is recommended for troubleshooting the RF circuitry. Because some spectrum analyzers, such as the HP 8566A/B, HP 8569A/B and the HP 8562A/B, have dc coupled inputs, either set the active probe for an ac coupled output or use a dc blocking capacitor (HP 11240B) between the active probe and the spectrum-analyzer input.

Confirming a Faulty Synthesizer Section

The A11 YTO (the HP 8562A/B's first LO) is a Yig-Tuned Oscillator which tunes from 2.95 to 6.8107 GHz. The A7 1ST LO Distribution Amplifier (LODA) levels A11's output and distributes the signal to the A8 Dual Mixer, A15A2 Sampler, and the front panel's 1ST LO OUTPUT. The Synthesizer Section includes the following PLLs (Phase Locked Loops):

YTO PLL .....A7, A11, and A14 Frequency Control Assembly
Offset PLL (Sampling Oscillator PLL) ..... A15 RF Assembly
Roller Oscillator PLL.....A14 Frequency Control Assembly
Reference PLL..... A15 RF Assembly

In addition, the A14 assembly's Roller Oscillator PLL is actually comprised of the following three PLLs:

Main Oscillator PLL
Transfer Oscillator PLL
Offset Oscillator PLL (This is not the same as A15's Offset PLL)

The Main Oscillator PLL is sometimes swept backwards (higher frequency to lower frequency). This is necessary because of the way in which the Sampler IF signal is produced.

Note The Frequency Control board is mostly digitally controlled. If multiple failures appear in unrelated areas of the circuitry, the control may be at fault. Refer to the manual troubleshooting procedures for further help on isolating those failures.

Note The TAM is unable to test the signal path on the RF board. It tests the circuitry by digitally controlling the hardware and monitoring the control lines to make sure they are responding properly. Use the TAM's Automatic Fault Isolation routine or verify the RF levels manually to ensure proper operation.

1. Connect a DVM's positive lead to A15J502 pin 3 and the negative lead to A15J502 pin 6. This measures the sampling oscillator tune voltage which is an input to the A3 Interface Assembly's ADC MUX.

2. Set the HP 8562A/B to the following settings:

   SPAN ..... 0 Hz
   CENTER FREQ ..... 389.5 MHz
   CF STEP ..... 7.5 MHz

3. Use the step keys to tune the CENTER FREQ to the values listed in Table 11-1.

4. As the sampling oscillator frequency is increased, the DVM reading should also increase. The voltage should range from approximately +1.5 V dc to +6 V dc. If the tune voltage is correct, but the ADC measures the voltage and determines it to be out of specification, troubleshoot the A3 assembly's ADC MUX.

Table 11-1. Center Frequency Tuning Values

HP 8562A/B Center Frequency (MHz)	Sampling Oscillator's Frequency (MHz)
389.5	280.0
427.0	282.5
449.5	284.0
464.5	285.0
479.5	286.0
502.0	287.5
509.5	288.0
539.5	290.0
569.5	292.0
577.0	292.5
599.5	294.0
614.5	295.0
629.5	296.0
652.0	297.5
659.5	298.00

5. Disconnect W37 from A14J301.

6. Connect a test cable from W37 to the input of another spectrum analyzer. Tune the other spectrum analyzer to the following settings:

   Center Frequency ..... 10 MHz
   Span ..... 2 MHz

7. The amplitude of the 10 MHz reference signal should measure >−1 dBm. If the signal does not measure >−1 dBm, troubleshoot A15's TCXO.

8. Reconnect W37 from A14J301.

9. Connect the CAL OUTPUT to INPUT 50Ω.

10. Set the HP 8562A/B to the following settings:

    CENTER FREQ ..... 300 MHz
    SPAN ..... 100 MHz

11. If the 1st LO is present, a signal should be displayed at about −10 dBm (approximately ±20 MHz from the center frequency). If no signal is displayed and ERR 334 LO AMPL is not present, troubleshoot the A7 LODA. If no signal is displayed and ERR 334 LO AMPL is present, check the A11 YTO as follows:

    a. Set jumper A14J23 to the TEST position.
    b. Set the HP 8562A/B to the following settings:
        Mixing ..... EXT
        Harmonic Lock 6
    c. Set the HP 8562A/B to the following settings:
        CENTER FREQ ..... 18 GHz
        CF STEP ..... 1.2 GHz
        SPAN ..... 0 Hz
    d. Connect a power meter directly to the output of the A11 YTO.
    e. Press the HP 8562A/B's step-up key and measure the YTO output power at each step.
    f. Check that A11 YTO's output power is between +9 and +13 dBm.
    g. Set jumper A14J23 to the NORM position and reconnect the A11 YTO.

12. On the HP 8562A/B press (RECALL), MORE, FREQ DIAGNOSE, and MAIN ROLLER. Note the Main-Roller Oscillator's frequency.

    Main-Roller Oscillator's Frequency = _____MHz

13. Disconnect W32 to A14J501 and connect the output of a signal source to A14J501. Connect a DVM's positive lead to A14J17 pin 1 and negative lead to A14J17 pin 6. See Figure 11-1.

14. Set the signal source to the following settings:

    Power ..... 0 dBm
    Frequency ..... Frequency recorded in step 12

15. Tune the source 1 MHz below the Main Roller frequency. The voltage measured on the DVM should be approximately 8.2 V dc.

16. Tune the source 1 MHz above the Main Roller frequency. The voltage measured on the DVM should be approximately −8.2 V dc.

17. If the DVM reading does not change, the A14 Frequency Control Assembly is defective. Reconnect W32 to A14J501.

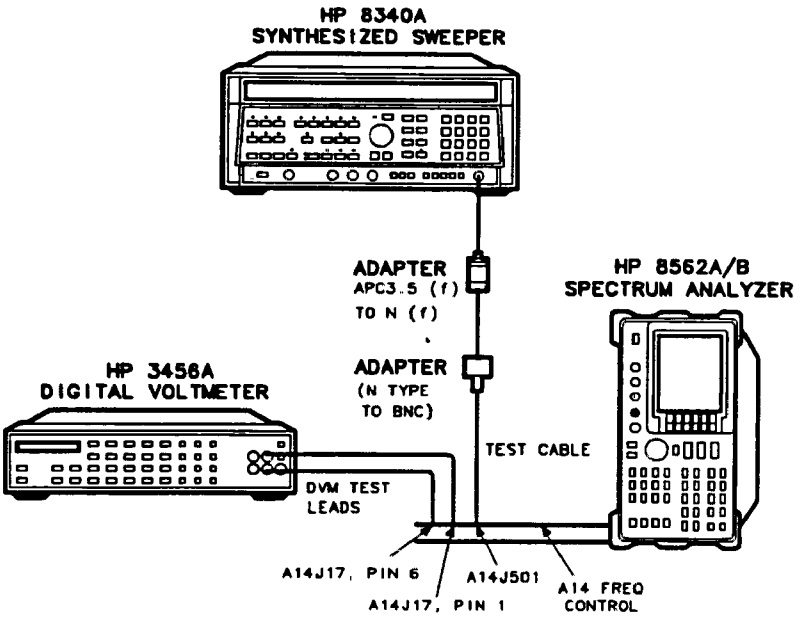

Figure 11-1. YTO Loop Test Setup

18. Disconnect W34 from A15A2J1 and disconnect W32 from A15J101.
19. Connect a frequency counter to A15J101. Connect a high-frequency test cable from an HP 8340A Synthesized Sweeper to A15A2J1. See Figure 11-2.
20. Connect a BNC cable from the HP 8562A/B's 10 MHz REF IN/OUT to the HP 8340A/B's FREQUENCY STANDARD EXT input.
21. Set the HP 8340A/B to the following settings:

    Reference ..... EXT REF
    Power Level ..... −5 dBm
    FREQ STEP ..... 7.5 MHz

22. Set the HP 8562A/B to the following settings:

    SPAN ..... 0 Hz
    CF STEP ..... 7.5 MHz

23. Set the HP 8562A/B and HP 8340A/B frequencies to the combinations listed in Table 11-2. (Use the frequency step-keys on both instruments.)

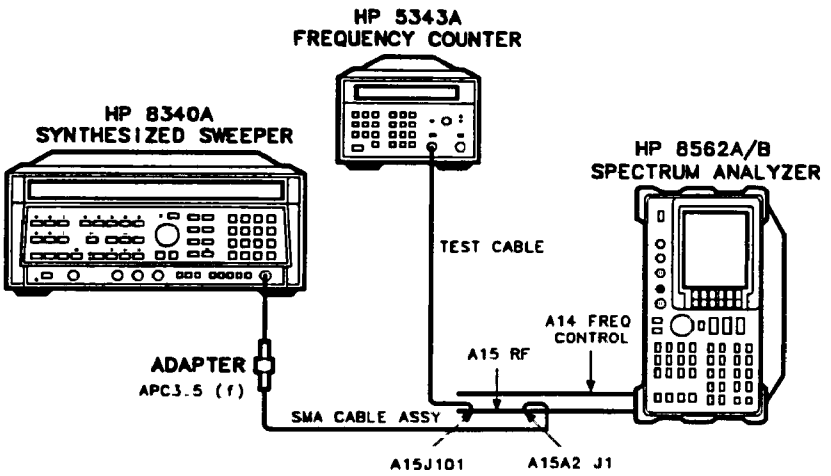

Figure 11-2. Sampler and Sampling Oscillator Test Setup

24. At each combination, the frequency counter should measure a sampler IF of 100.2 MHz. (The Offset PLL's sampling oscillator tunes to the frequencies listed in the table.) If the frequency counter does not read a sampler IF of 100.2 MHz, suspect the A15 RF Assembly.
25. Reconnect W34 to A15A2J1 and W32 to A15J101.
26. If YTO unlocks only with certain center frequency and span combinations, terminate the 1ST LO OUTPUT in 50 ohms.
27. Set the HP 8562A/B's CENTER FREQ and (SPAN) to generate the unlock conditions.
28. Set the HP 8562A/B's trigger to SINGLE.
29. Move jumper A14J23 to the TEST position.
30. Disconnect W34 from A15A2J1 and measure the power of the signal at the end of W34.
31. If the power is less than −6.5 dBm, suspect W34, A7 LODA, or A11 YTO.
32. Move jumper A14J23 to the NORM position.

Table 11-2. Sampling Oscillator Test Frequencies

HP 8562A/B Center Frequency (MHz)	HP 8340A CW Frequency (MHz)	Frequency of Offset PLL's Sampling Oscillator (MHz)
389.5	4300.2	280.0
427.0	4337.7	282.5
449.5	4360.2	284.0
464.5	4375.2	285.0
479.5	4390.2	286.0
502.0	4412.7	287.5
509.5	4420.2	288.0
539.5	4450.2	290.0
569.5	4480.2	292.0
577.0	4487.7	292.5
599.5	4510.2	294.0
614.5	4525.2	295.0
629.5	4540.2	296.0
652.0	4562.7	297.5
659.5	4570.2	298.0

Troubleshooting Test Setup

Some Synthesizer Section problems require placing the YTO PLL in an unlocked condition. This is done by moving jumper A14J23 to the TEST position. This grounds the YTO LOOP ERROR signal, disabling the CPU's ability to detect an unlocked YTO. The FM Coil Driver's output is set to its mid-range level causing the YTO to be controlled only by the Main Coil Tune DAC.

Synthesizer Section troubleshooting is best done with the HP 8562A/B's SPAN set to 0 Hz (even though it is still possible to sweep the Main and FM coils of the YTO).

With the YTO in its unlocked conditions and the SPAN set to 0 Hz, the nominal YTO frequency is not necessarily the value listed as LO FREQ in the Frequency Diagnose menu. The YTO has an initial pretune accuracy of ±20 MHz, but this pretune accuracy shifts ±10 MHz as a function of the Sampler IF frequency. This enables the YTO loop to acquire lock when the Sampler IF is near it's extremes. As a result, the nominal YTO frequency also shifts ±10 MHz depending on the Sampler IF frequency.

The Roller Oscillator frequency is the same as the desired sampler IF. Table 11-3 outlines the changes in YTO pretune accuracy and nominal YTO frequency as a function of Roller Oscillator frequency.

- To display the Roller Oscillator's frequency press (RECALL), MORE, FREQ DIAGNOSE, MAIN ROLLER. If the Sampler IF is negative (YTO frequency is lower than the desired Sampling Oscillator harmonic), the Main Roller frequency will be displayed as a negative number.

- To display the nominal YTO's frequency, press (RECALL), MORE, FREQ DIAGNOSE, LO FREQ.

Table 11-3. YTO Frequency in TEST Position

Roller Oscillator Frequency	YTO Pretune Accuracy	Nominal YTO Frequency
−104 to −93 MHz	+30/−10 MHz	LO Frequency + 10 MHz
−93 to −73 MHz	±20 MHz	LO Frequency
−73 to −65 MHz	+10/−30 MHz	LO frequency −10 MHz
65 to 73 MHz	+30/−10 MHz	LO Frequency +10 MHz
73 to 93 MHz	±20 MHz	LO Frequency
93 to 104 MHz	+10/−30 MHz	LO Frequency −10 MHz

Troubleshooting Using the TAM

When using Automatic Fault Isolation, the TAM indicates suspected circuits that need to be manually checked. Use Table 11-4 to locate the manual procedure.

Table 11-5 lists assembly test connectors associated with each Manual Probe Troubleshooting test. Figure 11-3 illustrates the location of A14 and A15 test connectors.

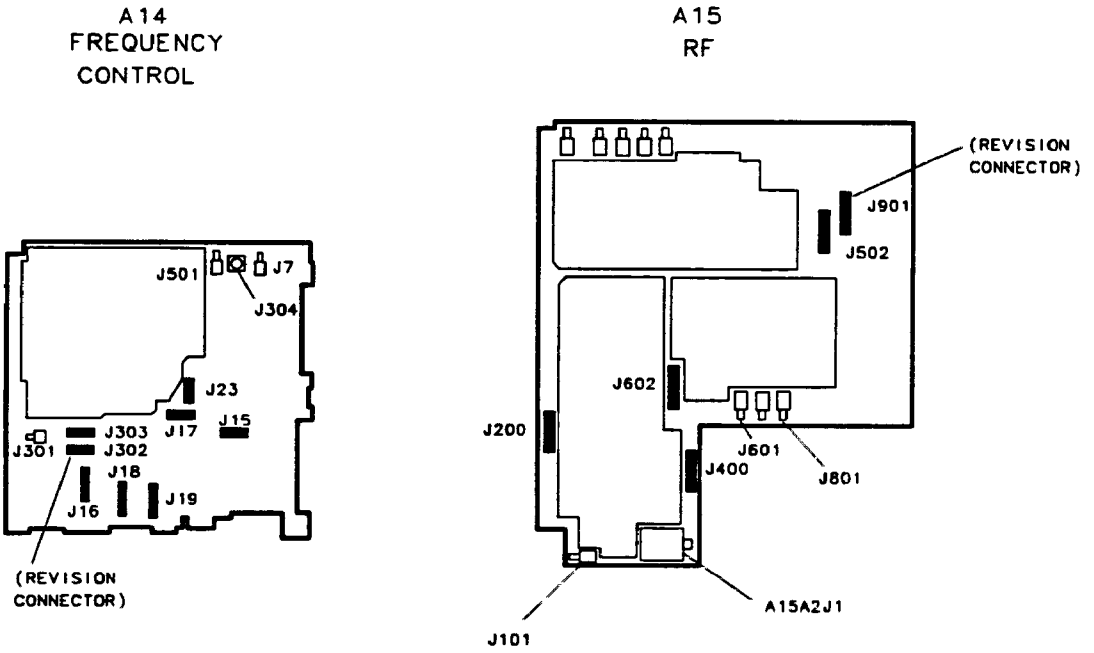

Figure 11-3. A14 and A15 Test Connectors

Table 11-4. Automatic Fault Isolation References (1 of 2)

Suspected Circuit Indicated by Automatic Fault Isolation	Manual Procedure to Perform
Check the YTO Loop	
Check 1st LO	Confirming a Faulty Synthesizer Section *(steps 9-11)*
Check 1st LO Pretune Frequency and Amplitude	Unlocked YTO PLL *(steps 10-13)*
Check 3rd LO Drive	Third LO Driver amplifier *(steps 1-6)*
Check 10 MHz Reference to Phase Frequency Detector	Unlocked Reference PLL *(steps 8-13)*
Check for 10 MHz Signal at Other Input to Phase/Frequency Detector	Unlocked Reference PLL *(steps 12 and 13)*
Check A3 ADC MUX Function Block	Confirming a Faulty Synthesizer Section *(steps 1-4)*
Check A14 Frequency Control Assembly	Confirming a Faulty Synthesizer Section *(steps 12-17)*
Check A14J301 10 MHz REF Input	Confirming a Faulty Synthesizer Section *(steps 5-8)*
Check A15 RF Assembly	Confirming a Faulty Synthesizer Section *(steps 18-25)*
Check Current Source U307	First-LO Span Problems (All Spans) *(steps 14-21)*
Check FM Loop Sense	Unlocked YTO PLL *(steps 28-34)*
Check YTF Gain and OFFset DACs	YTF Driver Circuit *(steps 10-23)*
Check Level at Amplifier Input	Third LO Driver Amplifier *(steps 1-6)*
Check Levels into Mixer U400	Unlocked Offset PLL *(steps 3-13)*
Check Loop References	Unlocked Offset PLL *(steps 1 and 2)*
Check Main Coil Tune DAC	Unlocked YTO PLL *(steps 45-49)*
Check Main Coil Coarse and Fine DACs	Unlocked YTO PLL *(steps 41-44)*
Check Main Roller Mixer	Main Oscillator PLL *(steps 10-15)*
Check Main Roller Oscillator and Output Buffer Amp	Main Oscillator PLL *(steps 1-4)*
Check Main Roller PLL	Main Oscillator PLL *(steps 16-22)*
Check Main Roller Pretune DAC	Main Oscillator PLL *(steps 5-9)*
Check Main Roller Sweep/Hold Switches	First-LO Span Problems ≤1 MHz *(step 9)*
Check Offset Oscillator and Buffer Amp	Offset Oscillator PLL *(steps 1-3)*

Table 11-4. Automatic Fault Isolation References (2 of 2)

Suspected Circuit Indicated by Automatic Fault Isolation	Manual Procedure to Perform
Check Offset Oscillator PLL	Offset Oscillator PLL *(steps 14-18)*
Check Offset Oscillator PLL Pre-Scaler	Offset Oscillator PLL *(steps 9-13)*
Check Offset Oscillator Pretune Circuitry	Offset Oscillator PLL *(steps 4-8)*
Check Offset Span Accuracy	First-LO Span Problems ≤1 MHz *(step 8)*
Check Offset Oscillator Sweep/Hold	Offset Oscillator PLL *(steps 20-23)*
Check Phase/Frequency Detector	Unlocked Reference PLL *(steps 17-22)*
Check Path to Phase/Frequency Detector	Unlocked Offset PLL *(steps 3-7, 14-19)*
Check Roller Oscillator	Unlocked YTO PLL *(steps 14-18)*
Check Sampler Drive Output of A7 LODA	Unlocked YTO PLL *(steps 19-22)*
Check Sampler IF	Unlocked YTO PLL *(steps 23-27)*
Check Sampler/Sampler IF Operation	Sampler and Sampler IF *(steps 1-15)*
Check Span Attenuator	First-LO Span Problems (All Spans) *(steps 6-13)*
Check Sweep Generator	Sweep Generator Circuit
Check Sweep + Tune Multiplier	YTF Driver Circuit *(steps 4-9)*
Check the 600 MHz Reference Loop Amplifier	Unlocked Reference PLL *(steps 23-26)*
Check the YTO Loop	Unlocked YTO PLL
Check Transfer Oscillator	Transfer Oscillator PLL *(steps 1 and 2)*
Check Transfer Oscillator PLL	Transfer Oscillator PLL *(steps 15-16)*
Check Transfer Oscillator Pre-Scaler	Transfer Oscillator PLL *(steps 11-14)*
Check Transfer Oscillator Pretune DAC	Transfer Oscillator PLL *(steps 11-14)*
Check YTF Gain and Offset DACs	Transfer Oscillator PLL *(steps 1-10)*
Check YTO FM Coil Driver	First-LO Span Problems (1 MHz to 20 MHz) *(step 6)*
Check YTO FM Coil Driver and Main Loop Error Voltage Driver	Unlocked YTO PLL *(steps 35-40)*

Table 11-5. TAM Tests versus Test Connectors (1 of 2)

Connector	Manual Probe Troubleshooting Test	Measured Signal Lines
A14J15	Sweep Generator	MS8
	Span Attenuator DAC	MS7
	Span Attenuator Switches	MS7
	Sweep + Tune Mult Input Amp	MS1, OS1
	Sweep + Tune Mult Input Switches	MS1, MS3
	VCO Sweep Driver	MS6, OS1
A14J16	FAV Generator	MS4
	FAV Gen 0.5 V/GHz Output	MS5
	YTF Offset DAC	MS6
	YTF Gain and Offset Input	MS2
	YTF Gain DAC	MS1
	YTF Drive	MS3
	Band Switch Driver	MS8
A14J17	Main Coil Course DAC	MS3
	Main Coil Fine DAC	MS2
	Main Coil DACs Output	MS5
	YTO Loop Phase Detector	MS1
	Main Loop Error Volt DVR	MS4
	Option Drive	MS8
	Option Drive Switch	MS7
	Option Drive DAC	MS6
A14J18	±10 V Reference	MS1, MS2
	LODA Drive	MS5, MS6, MS7, MS8
A14J19	Main Coil Tune DAC	MS3
	Sweep Generator DAC	MS4
	Sweep Generator Switches	MS4
	Second Conv PIN Switch	MS8
	Second Conv Mixer Bias	MS1
	Second Conv Drain Bias	MS3
	Second Conv Doubler Bias	MS4
	Second Conv Driver Bias	MS5
	First Mixer Drive Switch	MS7
	First Mixer Drive DAC	MS6
A14J302	Revision	MS7
	XFER Osc Bias	MS1
	XFER Pretune DAC	MS6
	Offset Osc Bias	MS2
	Offset Pretune DAC	MS8
	Offset Amp Bias	MS5

Table 11-5. TAM Tests versus Test Connectors (2 of 2)

Connector	Manual Probe Troubleshooting Test	Measured Signal Lines
A14J303	XFER Amp Bias	MS3
	Main Amp Bias	MS4
	Out Amp Bias	MS1
	Main Osc Bias	MS2
	Main Pretune DAC	MS7
	Course Adj DAC	MS8
	Fine Adj DAC	MS6
	Span Multiplier DAC	MS5
A15J200	Positive 15 Volt Supply	MS1
	Sampler Drive Buffer Bias	MS2
	Sampling Oscillator Bias	MS3
	Offset Lock Drive Buffer	MS4
	OFL Error Voltage	MS6
	Phase Detector Bias Adjust	MS8
A15J400	Positive 15 Volt Supply	MS2
	Offset Lock RF Buffer	MS4
	IF AMP/Limiter Bias	MS6
	Offset Lock Loop Buffer D	MS7
	Offset Lock Loop Buffer C	MS8
	Sampler Bias Test	MS3
A15J502	Positive 15 Volt Supply	MS2
	Third LO Tune Voltage	MS3
	Offset Lock Loop Buffer	MS4
	600 MHz Oscillator Bias	MS5
	Calibrator AGC Amp Bias	MS6
	Calibrator Ampl Adj	MS7
	3rd LO Driver Amp	MS1, MS8
A15J602	Positive 15 Volt Supply	MS8
	Flatness Compensation 3	MS2
	Flatness Compensation 2	MS5
	Flatness Compensation 1	MS6
	SIG ID Collector Bias	MS7
	RF Gain Control Test	MS1, MS3
A15J901	Revision	MS4, MS3
	External Mixer Switch	MS1, MS8
	Signal ID Switch	MS5, MS6
	Ten Volt Reference	MS4
	External Mixer Bias	MS7
	RF Gain Test	MS2

General PLL Troubleshooting

The Synthesizer Section relies heavily on Phase-Lock Loops (PLL). Typically, faulty PLL's are either locked at the wrong frequency or unlocked. The information below applies to troubleshooting these two classes of problems on a generalized PLL.

PLL Locked at Wrong Frequency

Numbers in the following text identify items in Figure 11-4.

- Any frequency errors at reference (1) will be multiplied by N/M on the PLL's output.
- A sampler reference-frequency error (2) will be multiplied by its harmonic on the PLL's output.
- A mixer reference-frequency error (3) produces the identical error on the PLL's output.
- If divider input or output frequencies (4) are wrong, check for incorrect divide numbers and data controlling the dividers.

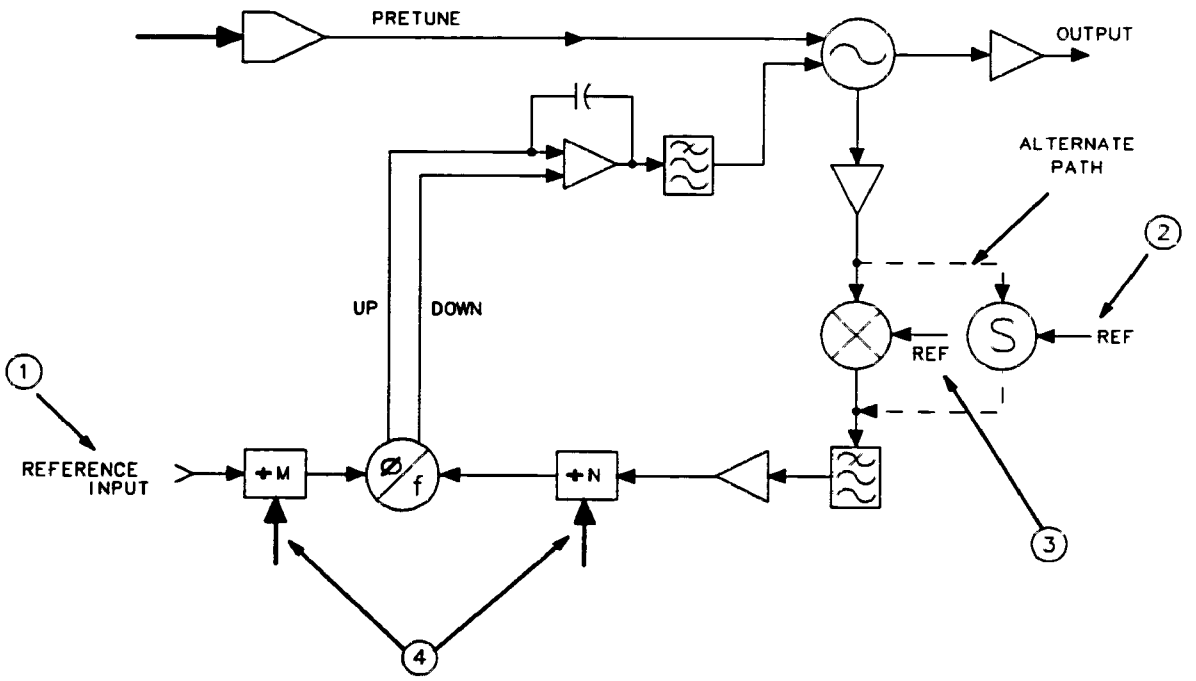

Figure 11-4. PLL Locked at Wrong Frequency

Unlocked PLL

An unlocked PLL can be caused by problems inside or outside the PLL. Troubleshoot this problem by working backward from the oscillator as described in the steps below. Numbers in the following text identify items in Figure 11-5.

1. The loop integrator's output voltage (1) should be attempting to tune the oscillator to the correct frequency.

   a. The voltage at (1) should increase as the frequency increases on the following PLLs:

      YTO PLL ..... A14J17 pin 1 (YTO LOOP ERROR)
      Reference PLL .....A15J502 pin 3 (LO3 ERR)
      Sampler PLL..... A15J200 pin 13 (OFL ERR)

   b. The voltage at (1) should increase as the frequency decreases on the following PLLs:

      Main Roller PLL ..... A14U115B pin 7 (MAINSENSE)
      Offset Roller PLL.....A14U111A pin 1 (OFFSENSE)
      Transfer Roller PLL.....A14U126A pin 1 (XFRSENSE)

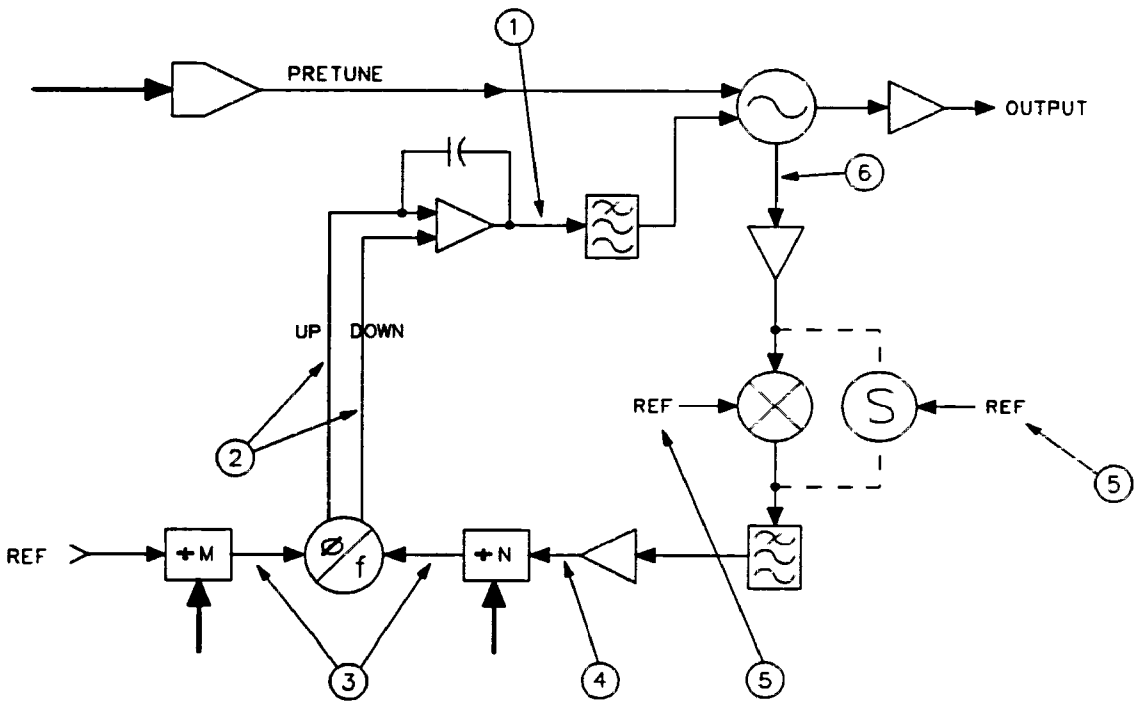

Figure 11-5. Unlocked PLL

2. If the integrator's output voltage changes in the manner described in step 1, the problem is external to the PLL. For example, the pretune DAC could be faulty. If the integrator's output voltage appears incorrect, confirm that the pulses out of the phase detector (2) are attempting to tune the oscillator in the correct direction.

3. If the phase detector's output is bad, check the inputs to the detector (3). One input should be higher in frequency than the other; this should match the phase detector outputs.

4. Confirm proper power levels for the signals at the input to the "N" dividers (4), the reference input (5), and the loop's feedback path (6).

Frequency Span Accuracy Problems

The HP 8562A/B employs lock-and-roll tuning to sweep the 1st LO. The 1st LO is locked to the start frequency immediately after the previous sweep has been completed. The 1st LO is then unlocked, and, when a trigger signal is detected, the 1st LO sweeps (rolls).

When there is a considerable delay between the end of one sweep and the beginning of the next, the actual 1st LO start frequency may differ from the locked start frequency. This start frequency drift will be most noticeable in a 1.01 MHz LO span (the narrowest FM coil span). This drift is not noticeable in either Free Run or Line Trigger modes.

The sweep signal is applied to different oscillators in the synthesizer section depending on the desired first-LO's span (due to harmonic mixing, this is not necessarily the same as the span setting of the analyzer). Refer to Table 11-6 for a listing of sweep-signal destinations versus First-LO spans.

Sweeping the Roller Oscillator's Offset Oscillator PLL results in sweeping the YTO's FM coil. There is a one-to-one relationship between the roller-oscillator's frequency span and the first-LO's span.

Table 11-6. Sweep Signal Destination versus Span

First LO Span	Sweep Signal Destination
>20 MHz	A11 YTO's Main Coil
1.01 MHz to 20 MHz	A11 YTO's FM Coil
1.01 kHz to 1 MHz	Main Roller Oscillator
≤100 kHz	Offset Roller Oscillator

Determining the First-LO Span

The first-LO's span depends on the spectrum analyzer's harmonic-mixing number. Use the following steps to determine the first-LO's span:

1. Read the span setting displayed on the HP 8562A/B.
2. Determine the harmonic-mixing number from the information in Table 11-7.

Table 11-7. Harmonic Mixing Number versus Center Frequency

Center Frequency	Harmonic Mixing Number
1 kHz to 2.9 GHz	1
2.75 GHz to 6.46 GHz	1
5.86 GHz to 13.0 GHz	2
12.4 GHz to 19.7 GHz	3
19.1 GHz to 22.0 GHz	4

3. Use the following equation to determine the first-LO span used.

$$\text{First LO Span} = \frac{\text{Display's Span Setting}}{\text{Current Band's Harmonic Mixing Number}}$$

4. Refer to Table 11-6 to determine the circuit associated with the span.

Confirming Span Problems

1. If all first-LO spans or only first-LO spans of 1.01 MHz or above are affected, perform the YTO Adjustment procedure in Chapter 2.
   a. On the HP 8562A/B press (PRESET), REALIGN LO & IF, and retest all spans.
   b. If the YTO Adjustment has sufficient range and only LO spans of 1.01 MHz or above are faulty, test YTO linearity by performing step c.
   c. Test the span in question at different center frequencies in the same band. If the span accuracy changes significantly (2% or more), suspect the A11 YTO.
2. If only first-LO spans of 1 MHz or less are faulty, suspect A14's Roller Oscillator PLL.
3. If there are several spans in the main coil, FM coil, and roller span ranges affected, suspect A14's span attenuator.

YTO Main Coil Span Problems (LO Spans >20 MHz)

For YTO Main Coil spans, the YTO is locked at the beginning of the sweep and the sweep ramp is summed into the Main Coil Tune Driver.

1. Perform the YTO Adjustment procedure in Chapter 2. If the YTO Adjustments cannot be performed, continue with step 2.
2. Set the HP 8562A/B to the following settings:

   START FREQ ..... 10 MHz
   STOP FREQ ..... 2.9 GHz

3. Verify that a −1.2 V to −4.8 V ramp (approximately) is present at A14U331 pin 2.
4. If this ramp is not present, troubleshoot the Main/FM/VCO Sweep Switch. See Function Block G of A14 Frequency Control Schematic (sheet 2 of 5).

5. Measure the output of the Main Coil Tune DAC at A14J18 pin 3. At the frequency setting of step 2, this should be −2.49 V. If the voltage is not −2.49 V, troubleshoot the Main Coil Tune DAC. See Function Block C of A14 Frequency Control Schematic (sheet 2 of 5).

YTO FM Coil Span Problems (LO Spans 1.01 MHz to 20 MHz)

In YTO FM Coil spans, the YTO loop is locked and then opened while the sweep ramp is summed into the FM coil. FM spans are adjusted by changing the sensitivity of the FM coil driver.

1. Perform the YTO Adjustment procedure in Chapter 2. If the YTO adjustments cannot be performed, continue with this procedure.
2. Set the HP 8562A/B to the following settings:

   CENTER FREQ ..... 300 MHz
   SPAN ..... 20 MHz
   SWEEPTIME ..... 50 ms

3. Check for the presence of a 0 V to −10 V sweep ramp at A14J15 pin 14 (input to the Main/FM/VCO/Sweep Switch). Refer to Function Block G of A14 Frequency Control Schematic (sheet 2 of 5).
4. Check for the presence of a 0 V to +5 V sweep ramp at A14U405 pin 6 (YTO FM Coil Driver). Refer to Function Block N of A14 Frequency Control Schematic (sheet 2 of 5).
5. Check the state of the Main/FM/VCO Sweep Switches as indicated in Table 11-8.
6. The rest of the procedure troubleshoots the YTO FM Coil Driver. Refer to Function Block N of A14 Frequency Control Schematic (sheet 2 of 5).

Table 11-8. Settings of Sweep Switches

Switch	Switch State	Switch Control Line (Pin #)	Control Line State (TTL)
U318A	Open	1	High
U318C	~~Open~~	9	High
U318D	Closed	16	Low
U324A	~~Closed~~	1	High
U324B	Closed	8	High
U324C	Open	9	Low

7. Set the HP 8562A/B to the following settings:

   CENTER FREQ ..... 300 MHz
   SPAN ..... 0 Hz
   TRIG ..... SINGLE

8. On the HP 8562A/B press (SAVE), SAVE STATE, STATE 0.
9. Remove jumper A14J23 and connect a dc voltage source to A14J23 pin 2.
10. Connect a microwave frequency-counter or spectrum analyzer to the HP 8562A/B's 1ST LO OUTPUT.
11. Set the dc-voltage source's output for 0 V dc and note the 1st LO frequency.

12. Set the dc-voltage source's output for +10 V dc. The 1st LO frequency should increase approximately +15.6 MHz.
13. The voltage at A14U332 pin 2 should be approximately 19% of the voltage at A14J23 pin 2.
14. If the 1st LO frequency did not change in step 12, set the HP 8562A/B's (LINE) switch OFF and disconnect W10 from A14J3.
15. Place a jumper between A14J3 pins 9 and 10 and set the (LINE) switch ON.
16. On the HP 8562A/B press (RECALL), STATE, STATE 0.
17. Repeat steps 6 through 13.
18. If the voltage at U332 pin 2 is correct with A14J3 pins 9 and 10 shorted, but was incorrect with W10 connected, the YTO FM Coil is probably open; replace the A11 YTO.

Roller Oscillator Span Problems (LO Spans ≤1 MHz)

The following procedure troubleshoots problems with the Roller Oscillator PLL's Main Oscillator (101 kHz to 1 MHz) and Offset Oscillator (≤100 kHz).

1. Set the HP 8562A/B to the following settings:

   CENTER FREQ ..... 300 MHz
   SPAN ..... 1 MHz
   RES BW ..... 10 kHz
   VIDEO BW ..... 10 kHz
   SWEEPTIME ..... 50 ms

2. Set an oscilloscope to the settings listed below and monitor A14J17 pin 1. The waveform should look similar to Figure 11-6.

   Amplitude Scale ..... 250 mV/div
   Sweep Time ..... 50 ms/div

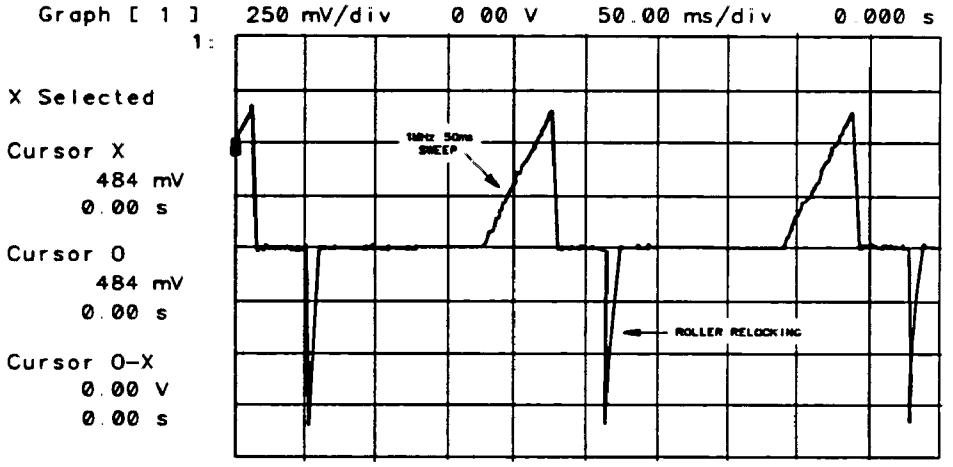

Figure 11-6. Input to YTO FM Coil Driver

3. If A14J17 pin 1 does not appear to be correct, verify that the sweep ramp is reaching the Main/FM/VCO Sweep Switch as follows:
   a. Change the oscilloscope's amplitude scale to 1.25 V/div and monitor the A14J15 pin 14. The waveform should be a 0 V to −10 V sweep of 50 ms duration. See Figure 11-7.
   b. Check for a 0 V to −10 V ramp at A14J15 pin 13. Refer to Function Block H of A14 Frequency Control Schematic (sheet 2 of 5).
   c. Check that state of the Main/FM/VCO Sweep Switches as indicated in Table 11-9.

Note

Switches U324A and U318C can change the polarity of A14U404B. This allows the Roller Oscillator to sweep backwards when the YTO is locked to a lower sideband of a Sampling Oscillator's comb tooth. The YTO always sweeps forward (lower frequency to higher frequency), but the Roller Oscillator sometimes sweeps backwards (higher frequency to lower frequency). The `FREQ DIAGNOSE` menu will indicate a negative Main Roller frequency in this instance.

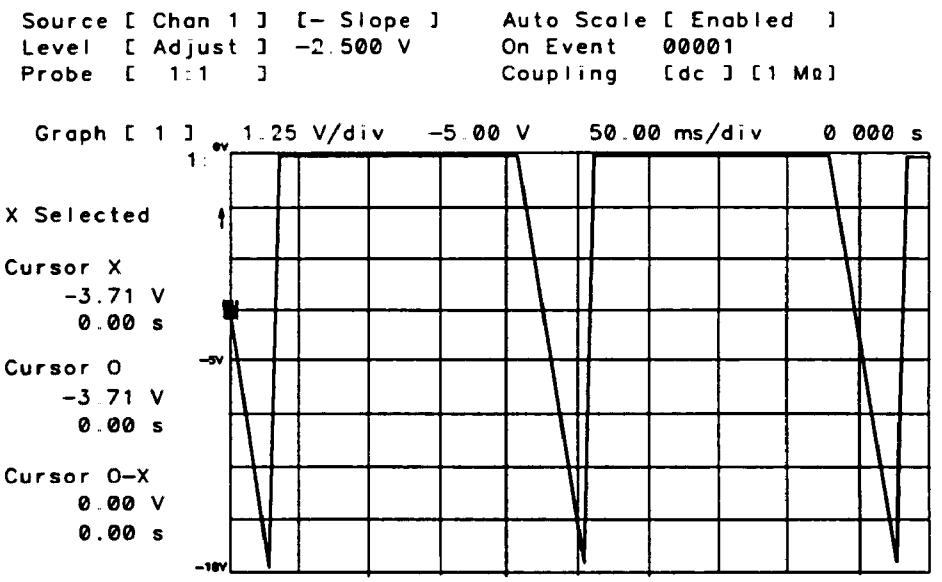

Figure 11-7. Input to Main/FM/VCO Sweep Switch

Table 11-9. Settings of Sweep Switches

Switch	Switch State	Switch Control Line (Pin #)	Control Line State (TTL)
U318A	Open	1	High
U318C	Open	9	High
U318D	Open	16	High
U324A	Closed	1	High
U324B	Closed	8	High
U324C	Closed	9	High

4. Set the HP 8562A/B to the following settings to open U324A and close U418C. This inverts the waveform at A14J15 pin 13.

START FREQ ..... 678.8 MHz
SPAN ..... 1 MHz

5. The waveform at A14J15 pin 13 should be a ramp from 0 V to +10 V.
6. Set the HP 8562A/B to the following settings:

   CENTER FREQ ..... 300 MHz
   SPAN ..... 1 MHz

7. Monitor the output of A14J304 ROLLER TST with another spectrum analyzer and check that the Roller Oscillator is sweeping from 94.2 to 95.2 MHz.
8. If spans ≤100 kHz are faulty, troubleshoot the Offset Oscillator circuits as follows:

Note

In LO spans ≤100 kHz, the Roller Oscillator PLL's Offset Oscillator is swept. The Main Roller Oscillator remains locked to the Offset Oscillator's frequency divided by 100. (In a 100 kHz span, the Offset Oscillator rolls 10 MHz while the Main Roller Oscillator rolls 100 kHz. The YTO is locked to the Main Roller Oscillator and also rolls 100 kHz.

   a. If the sweep ramp is correct at A14J15 pin 13, but the Roller Oscillator is not sweeping properly in spans ≤100 kHz, troubleshoot the Offset Oscillator Sweep/Hold circuit. Refer to Function Block AD of A14 Frequency Control Schematic (sheet 5 of 5).
   b. If the Offset Oscillator Sweep/Hold circuit is operating properly, Replace the A14A101 Offset Oscillator. Refer to Function Block AE of A14 Frequency Control Schematic (sheet 5 of 5).

9. If all LO spans ≤1 MHz are faulty, troubleshoot the Main Roller Sweep/Hold switches. Refer to Function Block AM of A14 Frequency Control Schematic (sheet 5 of 5).

Note

The switching network, U116A, C, D, and Q101, determines the Main Roller Oscillator's voltage source. When the oscillator is locked, U116A is closed to apply the PLL error voltage to the oscillator. When the oscillator is swept, U116A opens and U116C closes applying the span ramp to the oscillator. U116D also closes providing the same impedance to ground as during the lock mode.

10. If the spans are still faulty, refer to "Unlocked Roller Oscillator PLL" in this chapter.

First-LO Span Problems (All Spans)

1. Set the HP 8562A/B to the following settings:

   CENTER FREQ ..... 300 MHz
   SPAN ..... 1 MHz
   RES BW ..... 1 MHz
   VIDEO BW ..... 1 MHz
   SWEEPTIME ..... 50 ms

2. Check that there is 0 V to +10 V ramp of 50 ms duration at A14J15 pin 15.

3. If a scan ramp is not present, refer to "Sweep Generator" in this chapter.

4. If there is a 0 to −10 V ramp at A14J15 pin 14, the fault is probably in the Main/FM/VCO Sweep Switch. See Function Block G of A14 Frequency Control Schematic (sheet 2 of 5).

5. Check that there is a 0 V to −10 V ramp at U325 pin 1. The analyzer's ADC obtains information about the sweep from this node.

6. Continue with step 7 to check the Span Attenuator. See Function Block M of A14 Frequency Control Schematic (sheet 2 of 5).

7. With the analyzer set to the settings in step 1, monitor A14U323 pin 6 with an oscilloscope. A 0 V to +10 V ramp should be present.

8. Change the HP 8562A/B's span to 500 kHz and check for a 0 V to −5 V ramp at U323 pin 6.

9. Change the HP 8562A/B's span to 200 kHz and check for a 0 V to −2 V ramp at U323 pin 6.

10. Set the HP 8562A/B to the following settings:

    START FREQ ..... 2.75 GHz
    STOP FREQ ..... 6.4 GHz
    SWEEPTIME ..... 80 ms

11. Monitor A14J15 pin 14 for a 0 V to −9 V ramp. Switches U317A, U317B, and U317D should be open and U317C should be closed.

12. Change the HP 8562A/B's SPAN to 365 MHz and check for a 0 mv to −900 mV ramp at A14J15 pin 14. Switch U317C should be open and U317B closed.

13. Change the HP 8562A/B's SPAN to 36.5 MHz and check for a 0 mV to −90 mV ramp at A14J15 pin 14. Switch U317B should be open and U317A closed.

14. Check the Sweep Generator's Current Source with the following steps. See Function Block K of A14 Frequency Control Schematic diagram (sheet 2 of 5).

15. Set the HP 8562A/B to the following settings:

    CENTER FREQ ..... 300 MHz
    SPAN ..... 1 MHz
    SWEEPTIME ..... 50 ms

16. Use a DVM to monitor the voltage at A14J18 pin 4. The voltage should measure approximately −8.45 V dc.

17. Set the HP 8562A/B's sweep time to 100 ms. The voltage at J18 pin 4 should measure approximately −4.21 V dc.
18. Set the HP 8562A/B's sweep time to 200 ms. The voltage at J18 pin 4 should measure approximately −2.1 V dc.
19. The analog switches and comparators should be set as listed in Table 11-10.
20. Check that U312D opens when the sweep time is set to 2 seconds.
21. Check that U312B and U312C close when the sweep time is set to 20 seconds.

Table 11-10. Settings for Switches and Comparators

Sweep Time	Switch U312B	Switch U312C	Switch U312D	Comparator U319A Pin 1	Comparator U319B Pin 7
200 ms	Open	Open	Closed	High	High
2 s	Open	Open	Open	High	High
20 s	Closed	Closed	Open	High	High

First-LO Span Problems (Multiband Sweeps)

During multiband sweeps, the sweep ramp at A14J15 pin 15 should go from 0 V to +10 V for each band or portions of a band covered. See Function Block K of A14 Frequency Control Schematic diagram (sheet 2 of 5). However, the scan ramp at A14U325A pin 1 is scaled according to the percentage of the total span that the band is covering. See Function Block L of A14 Schematic Diagram (sheet 2 of 5). Also, the sum of the individual ramps is 10 V. Figure 11-8 illustrates both sweep and the scan ramp for a 2.75 to 22 GHz span (HP 8562A's preset state).

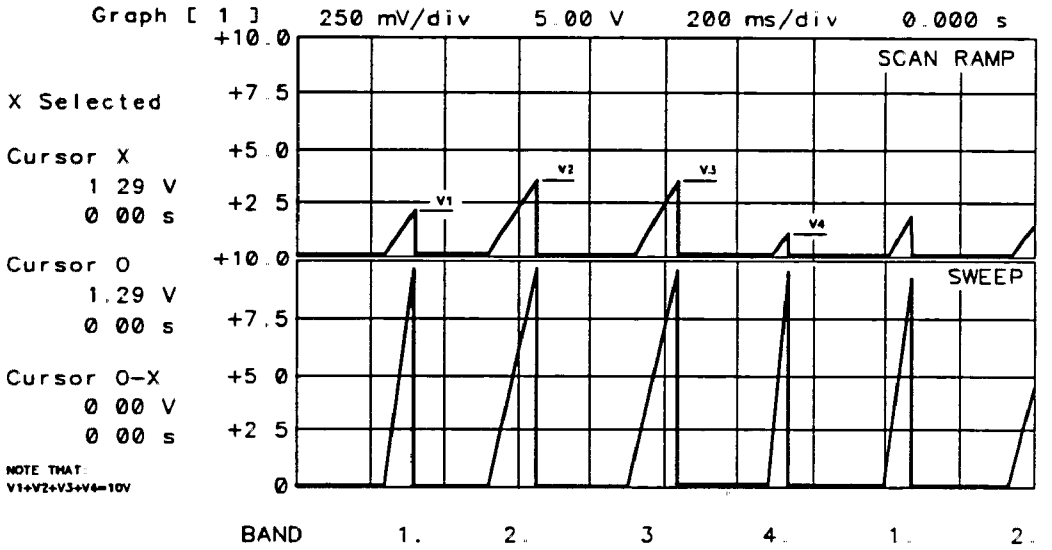

Figure 11-8. Sweep and Scan Ramps

Unlocked YTO PLL

Operation

The A11 YTO is locked to two other oscillators, the Roller PLL's Main Oscillator and the Offset PLL's Sampling Oscillator. For LO spans of 1.01 MHz and above, either the FM or Main Coil of the YTO is swept directly. For LO spans of 1 MHz and below, the Roller PLL's Main Oscillator is swept. The Sampling Oscillator remains fixed-tuned during all sweeps.

The output of A11 YTO feeds through the A7 LO Distribution Amplifier (LODA) to the A15A2 Sampler. The Offset PLL's Sampling Oscillator, which drives the sampler, oscillates between 280 and 298 MHz. The sampler generates harmonics of the Sampling Oscillator and one of these harmonics mixes with the YTO frequency to generate the Sampler IF frequency. As a result, the frequency of the Sampler IF is determined by the following equation:

$$F_{IF} = F_{YTO} - (N x F_{SAMP})$$

Where:

F_{IF} is the Sampler IF

F_{YTO} is the YTO's frequency

N is the desired Sampling Oscillator harmonic

F_{SAMP} is the Sampling Oscillator frequency

Notice that F_{IF} can be positive or negative depending upon whether the Sampling Oscillator harmonic used is below or above the YTO frequency. Of course, the actual Sampler IF is always positive, but the sign is carried along as a "bookkeeping" function which determines which way to sweep the Roller Oscillator (up or down) and what polarity the YTO error voltage should have (positive or negative) to maintain lock.

To check if a negative Sampler IF is selected, press (RECALL), MORE, FREQ DIAGNOSE, MAIN ROLLER. If the Main Roller Oscillator frequency is positive, the Sampler IF is also positive. A negative Main Roller frequency indicates that the Sampler IF is negative.

Notice that the polarity of the YTO loop error voltage (YTO LOOP ERROR) out of the YTO Loop phase/frequency detector changes as a function of the polarity of the Sampler IF. That is, for positive Sampler IF's, an increasing YTO frequency results in an increasing YTO LOOP ERROR signal. For negative Sampler IF's, a decreasing YTO frequency results in a decreasing YTO LOOP ERROR signal. This implies that to maintain lock in both cases, the sense of YTO LOOP ERROR must be reversed such that, with a negative Sampler IF, an increasing YTO LOOP ERROR results in an increasing YTO frequency. This is accomplished with error-sign amplifier, A14U328D. This amplifier can be firmware-controlled to operate as either an inverting or non-inverting amplifier. Digital control line ERRSGN (from A14U313 pin 12) controls the polarity of this amplifier. When ERRSGN is high, the amplifier has a positive polarity.

In Roller Spans (LO Spans <1 MHz) the YTO remains locked to the sweeping Roller Oscillator PLL's oscillator. Thus, the Sampler IF must always equal the Main Roller Oscillator frequency (conditions for lock). Since the YTO must always sweep up in frequency,

for negative Sampler IF's, the Main Roller Oscillator must sweep from a higher frequency to a lower frequency. This is necessary since an increasing YTO frequency decreases the Sampler IF for negative Sampler IF's. The opposite is true for positive Sampler IF's, so in these cases, the Main Roller Oscillator sweeps more conventionally from a lower frequency to a higher frequency. This implies that the sense of the span ramp sweeping the Roller Oscillator PLL must change between negative and positive Sampler IF's. This is accomplished by controlling the polarity of the VCO Sweep Driver. The polarity is controlled by VCOSGN from A14U425 pin 12. When VCOSGN is high, the VCO Sweep Driver has positive polarity.

The Main and Offset Roller Oscillators have opposite sense with respect to the VCO span ramp (VCO RAMP). A positive-going ramp moves the Main Roller Oscillator lower in frequency (Main Roller spans) while a positive-going ramp moves the Offset Roller Oscillator higher in frequency (Offset Roller spans). Thus the polarity of the VCO Sweep Driver depends on whether a Main Roller or Offset Roller LO span is selected.

Table 11-11 summarizes the amplifier polarities for the various combinations of Sampler IF polarities and LO spans.

The YTO Main Coil Filter is used to improve residual FM in FM spans. See Function Block E of A14 Frequency Control Schematic (sheet 2 of 5). Transistors Q304 and Q305 switch the filter (capacitor C36 and resistor R48) into the circuit. Transistor Q303 and U333 keep C36 charged during main spans so the frequency does not jump when C36 is switch in.

Table 11-11. Amplifier Polarities

		YTO Error Sign Amplifier	VCO Sweep Driver Amplifier	ERRSGN (A14U313 pin 12)	VCOSGN (A14U425 pin 12)
Roller's Offset Oscillator Swept	Positive Sampler IF	Positive	Negative	TTL High	TTL Low
	Negative Sampler IF	Negative	Negative	TTL Low	TTL High
Roller's Main Oscillator Swept	Positive Sampler IF	Positive	Positive	TTL High	TTL High
	Negative Sampler IF	Negative	Negative	TTL Low	TTL Low
FM/Main YTO Coils Swept	Positive Sampler IF	Positive	Does not apply	TTL High	Does not apply
	Negative Sampler IF	Negative	Does not apply	TTL Low	Does not apply

Troubleshooting an Unlocked YTO PLL

1. If the YTO PLL is unlocked, error code 301 should be displayed. Place the HP 8562A/B in ZERO SPAN. Figure 11-9 illustrates the simplified YTO PLL.
2. Move the jumper on A14J23 to connect pins 2 and 3 (TEST position). Refer to Figure 11-8 for the location of A14J23. Error code 301 should no longer be displayed. (The YTO PLL's feedback path is now open.)
3. On the HP 8562A/B, press (RECALL), MORE, FREQ DIAGNOSE, and LO FREQ. The displayed LO FREQ is the desired YTO frequency. Record the YTO's calculated frequency below:

   YTO Frequency (calculated) = _____MHz

4. Measure the YTO frequency at the front-panel's 1ST LO OUTPUT jack and record below:

   YTO Frequency (measured) = _____MHz

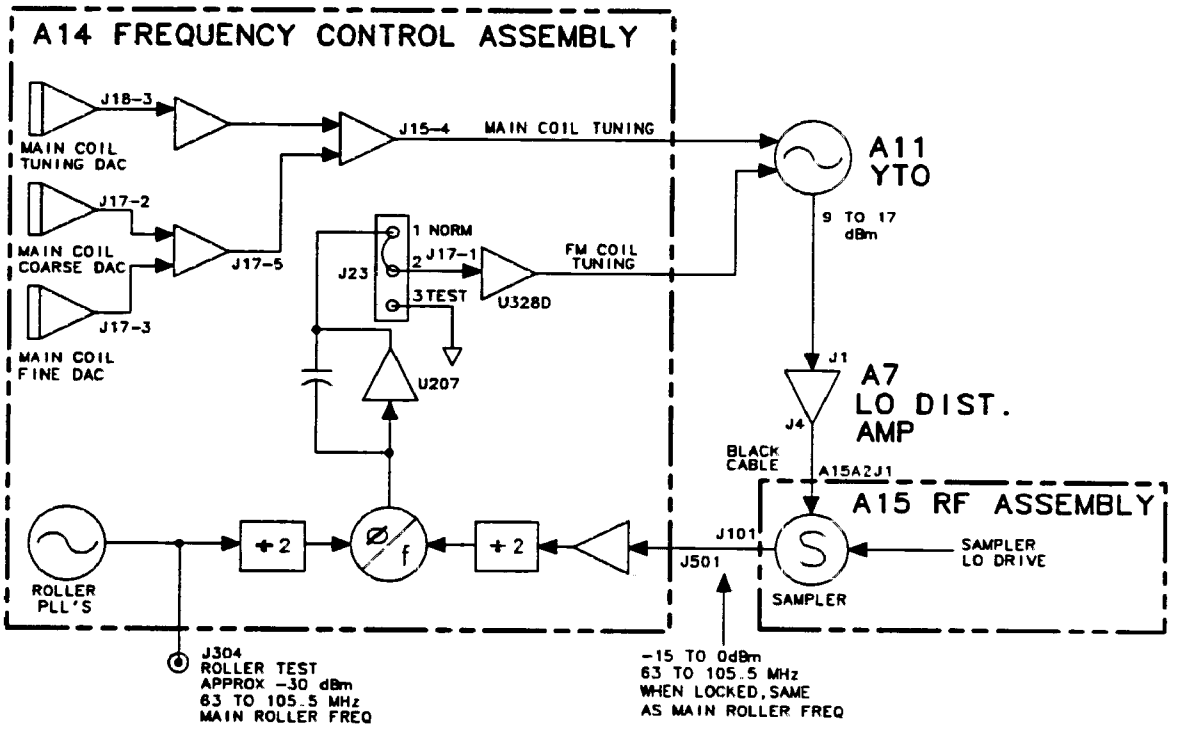

Figure 11-9. Troubleshooting an Unlocked YTO PLL

5. Calculate the YTO's frequency-error by subtracting the frequency recorded in step 3 from the frequency recorded in step 4. Record the result below:

   YTO Frequency Error = _____MHz

YTO Frequency Error = YTO Frequency $_{(MEASURED)}$ − YTO Frequency$_{(CALCULATED)}$

6. On the HP 8562A/B, press **MORE**, **FREQ DIAGNOSE**, and **MAIN ROLLER**. Record the Main Roller frequency below:

Main Roller Frequency = _____MHz

7. If the YTO Frequency Error recorded in step 5 is greater than 30 MHz, do the following:
   a. Check the YTO Adjustments using the TAM or the procedure in Chapter 2.
   b. Check the YTO DACs using the procedure in steps 41 through 49 below, or using Manual Probe Troubleshooting with the TAM on A14J17 and A14J18.
   c. Refer to steps 10 through 34 below.
8. If the YTO Frequency Error recorded in step 5 is less than 10 MHz, do the following:
   a. Measure the frequency at A14J304. The frequency should be equal to the frequency recorded in step 6. If not, refer to "Unlocked Roller Oscillator PLL."
   b. Measure the input and output levels of the A15A2 Sampler. If the sampler appears defective, check the LO drive to the sampler as described in "Sampler and Sampler IF."
   c. Refer to steps 35 through 49 below.
9. If the YTO Frequency Error recorded in step 5 is between 10 and 30 MHz, do the following:
   a. Find the Main Roller Frequency in Table 11-12 that matches the frequency recorded in step 6. Locate the corresponding acceptable YTO Frequency Error range in the table.

Note

Table 11-12 shows how close in frequency the YTO must be in order to phase-lock when the loop is closed. The range is a function of where the main roller oscillator is tuned. The Main Roller Frequency column (showing polarity) indicates whether the YTO frequency is above (+) or below (−) the sampler's harmonic.

   b. If the YTO Frequency Error recorded in step 5 is outside the range listed in Table 11-12, perform the following steps.
      i. Check the YTO Adjustments using the TAM.
      ii. Check the YTO DACs using the procedure in steps 41 through 49 below or using Manual Probe Troubleshooting with the TAM on A14J17 and A14J18.
      iii. Refer to steps 10 through 34 below.
   c. If the YTO Frequency Error recorded in step 5 is within the range listed in Table 11-12.
      i. Measure the frequency at A14J304. The frequency should be equal to the frequency recorded in step 6. If not, refer to "Unlocked Roller Oscillator PLL."
      ii. Measure the input and output levels of the A15A2 Sampler. If the sampler appears defective, check the LO drive to the sampler as described in "Sampler and Sampler IF."

iii. Refer to steps 35 through 49 below.

Table 11-12. YTO Frequency Errors with A14J23 on Pins 2 and 3

Main Roller Frequency	YTO Frequency Error (with J23 on pins 2 and 3)	Gain of U328B
−104 to −93 MHz	−10 to +30 MHz	−1
−93 to −73 MHz	−20 to +20 MHz	−1
−73 to −65 MHz	−30 to +10 MHz	−1
+65 to +73 MHz	−10 to +30 MHz	+1
+73 to +93 MHz	−20 to +20 MHz	+1
+93 to +104 MHz	−30 to +10 MHz	+1

10. The 1st LO's pretuned frequency must be sufficiently accurate for the YTO loop to acquire lock. The 1st LO's amplitude must be sufficient to drive the A15A2 Sampler. Perform the YTO Adjustment procedure, particularly the YTO Main Coil adjustments. (If available, use a synthesized-microwave spectrum analyzer instead of the microwave-frequency counter specified in the adjustment procedure.)
11. If the YTO's main coil cannot be adjusted, proceed to step 33 to troubleshoot the Main Coil Coarse and Fine DACs and Main Coil Tune DAC.
12. The front-panel's 1ST LO OUTPUT should measure between +14.5 and +18.5 dBm in amplitude.
13. If the 1ST LO OUTPUT amplitude is out of the specified range, perform the First LO Distribution Amplifier Adjustment procedure. Refer to Chapter 2.
14. Set the HP 8562A/B to the following settings:

    CENTER FREQ ..... 300 MHz
    SPAN ..... 0 Hz

15. Monitor the Roller Oscillator PLL's output at A14J304 (ROLLER TST) with a synthesized spectrum analyzer such as an HP 8568A/B or HP 8566A/B. Refer to Function Block AQ of A14 Frequency Control Schematic (sheet 5 of 5).
16. The signal at A14J304 (ROLLER TST) should measure approximately −30 dBm at 94.7 MHz.
17. If a problem exists only at particular CENTER FREQ and SPAN settings, determine the desired Roller Oscillator frequency by pressing (RECALL), MORE, FREQ DIAGNOSE, MAIN ROLLER and setting the HP 8562A/B to SINGLE trigger mode.
18. If the Roller Oscillator frequency is not correct, refer to "Unlocked Roller Oscillator PLL."
19. Set jumper A14J23 to the TEST position and set the HP 8562A/B to the following settings:

    CENTER FREQ ..... 2.9 GHz
    SPAN ..... 0 Hz

20. Disconnect cable W34 from A15A2J1.

21. Use a power meter to measure A7 LODA's sampler-drive output at the end of W34. The power should measure greater than −9 dBm.

22. Place jumper A14J23 in the NORMAL position and reconnect W34 to A15A2J1.

23. Set the HP 8562A/B to the following settings:

    CENTER FREQ ..... 300 MHz
    SPAN ..... 0 Hz

24. Place jumper A14J23 in the TEST position.

25. Disconnect W32 from A15J101. Monitor the Sampler IF output (A15J101, SAMPLER IF) with a synthesized spectrum analyzer such as an HP 8568A/B or HP 8566A/B.

26. The Sampler IF should measure between 74 MHz and 114 MHz at −15 dBm to +2 dBm. If the signal frequency or amplitude is incorrect, refer to "Unlocked Offset PLL."

27. Set jumper A14J23 in the NORMAL position. Reconnect W32 to A15J101.

Note

The A11 YTO has an initial pretune accuracy of ±20 MHz. However, when the Roller Oscillator frequency is <73 MHz, this is changed to +30/−10 MHz. If the Roller Oscillator is 93 MHz, the accuracy is changed to +10/−30 MHz. This is done by changing the Main Coil Coarse DAC to keep the Sampler IF within the acquisition range of the YTO Loop. When dealing with the Sampler IF and an unlocked YTO, the same frequency differences apply to the Sampler IF.

---

28. Set the HP 8562A/B to the following settings:

    CENTER FREQ ..... 300 MHz
    SPAN ..... 0 Hz

29. Connect an RF signal-generator's output to A14J501. Set the signal generator to the following settings:

    Frequency ..... 84 MHz
    Amplitude ..... 0 dBm

30. Monitor A14J17 pin 1 with a DVM or oscilloscope.

31. As the signal generator's frequency is increased to 104 MHz, the voltage at A14J17 pin 1 should change from +8.2 to −8.2 V dc ±1 V.

32. Set the signal generator's to the following settings and repeat step 23.

    Frequency ..... 84 MHz
    Amplitude ..... −15 dBm

33. If the voltage monitored in step 23 is correct with a 0 dBm output but not with −15 dBm output, suspect A14U201 or A14U202. If the voltage does not change, check the YTO PLL Loop's divide-by-two circuits as follows:

    a. Set the signal generator for an 80 MHz output.
    b. Measure A14U203 pin 2 with an active probe and a spectrum analyzer. The signal should be approximately 0 dBm (ECL levels) and 47.35 MHz (94.7 MHz Main Roller Frequency divided by two).
    c. The signal at A14U205 pin 2 should measure 40 MHz at approximately 0 dBm.

Note A14U205 is turned off during YTO FM coil sweeps (LO spans between 1.01 and 20 MHz).

34. Place jumper A14J23 in the NORMAL position and connect W32 to A14J501.
35. Steps 27 through 31 verify that the YTO-loop error voltage is reaching the FM coil. Refer to Function Blocks N and O of A14 Frequency Control Schematic (sheet 2 of 5). To troubleshoot the YTO FM Coil Driver, refer to step 6 of "First-LO Span Problems (1 MHz to 20 MHz)."
36. Remove jumper A14J23 and connect a dc power supply to A14J23 pin 2. Set the dc power supply to +7.5 V dc.
37. Verify the nominal test-point voltages listed in Table 11-13.
38. Change the input voltage to −7.5 volts and re-verify that the voltages listed in Table 11-13 are the same except for a change in polarity.
39. The Main-Loop Error-Voltage Driver has a gain of either 1.5 or 15; the analyzer's firmware controls the gain during the locking process. The error voltage is read by the ADC on the A3 Interface Assembly. U324D calibrates out any offsets from true ground. A14U326A inverts the sense of the YTO loop to lock the YTO on lower sampler-sidebands (YTO frequency <sampler frequency × sampler harmonic). The Main Roller frequency indicated in the FREQ DIAGNOSE menu will be negative in this situation. Changing the CENTER FREQ to 678.8 MHz with a SPAN of 0 Hz will change the switch setting of U326A and invert the voltages listed in Table 11-13.

Table 11-13. Voltages in FM Coil and Main Loop Drivers

Measurement Points	Voltages
A14U405 pin 6	+2.8 V dc
A14U332 pin 2	+1.36 V dc
A14J17 pin 4	>+12 V dc

40. Place jumper A14J23 in the NORMAL position.
41. The Main Coil Coarse and Fine DACs correct any initial pretune errors in the YTO main coil. The DACs adjust the FM-coil current to zero before any sweep begins. Refer to Function Block I of A14 Frequency Control Schematic (sheet 2 of 5). Place jumper A14J23 in the TEST position.
42. Set the HP 8562A/B to the settings listed below. These set both DACs to 128 (the DAC setting range is 0 to 255).

    CENTER FREQ ..... 300 MHz
    SPAN ..... 0 Hz
    TRIG ..... CONT

43. Verify the voltages listed in Table 11-14.

Table 11-14. Main Coil Coarse and Fine DACs Voltages

Measurement Points	Voltages
A14J17 pin 2	−5.0 V dc
A14J17 pin 3	−5.0 V dc
A14J17 pin 5	+5.079 V dc

44. Place jumper A14J23 in the NORMAL position.

Note

The A11 YTO has an initial pretune accuracy of ±20 MHz. However, when the Roller Oscillator frequency is <73 MHz this is changed to +30 to −10 MHz. If the Roller Oscillator frequency is >93 MHz, the accuracy is changed to +10 to −30 MHz. This is done by changing the Main Coil Coarse DAC to keep the Sampler IF within the acquisition range of the YTO Loop. When dealing with the Sampler IF and an unlocked YTO, the same frequency differences apply to the Sampler IF.

45. Set the HP 8562A/B to the following settings:

    CENTER FREQ ..... 300 MHz
    SPAN ..... 0 Hz

46. Place jumper A14J23 in the TEST position.

47. Measure the output of the Main Coil Tune DAC (A14J18 pin 3) with a DVM. Refer to Function Block C of A14 Frequency Control Schematic (sheet 2 of 5).

48. If the HP 8562A/B's center frequency is 300 MHz, the voltage at A14J18 pin 3 should measure −3.35 V ±0.25 V. The voltage may also be determined from the following equation:

    V = −(1st LO Frequency − 2.95 GHz) × 2.654 V/GHz

49. The voltage at A14U330 pin 2 should measure 3.4 V ±0.2 V dc. This represents a current setting the YTO to approximately 2.95 GHz.

Unlocked Roller Oscillator PLL

Operation

The Roller Oscillator is used in the HP 8562A/B as a reference for the 1st LO phase-lock loop. It provides the 25 Hz start-frequency resolution for the 1st LO, and is the means by which the 1st LO is swept in LO spans of 1 MHz or less (Roller spans). It is composed of the following three separate phase-lock loops:

Offset Oscillator PLL
Transfer Oscillator PLL
Main Oscillator PLL

These three PLLs operate together to produce an output frequency in the range of 65 MHz to 104 MHz selectable in 25 Hz increments. The output frequency can be swept (increasing or decreasing) over a selectable 2.5 kHz to 1 MHz range.

To determine the Roller frequency for any given center frequency, press (RECALL), MORE, FREQ DIAGNOSE, and MAIN ROLLER. The MAIN ROLLER frequency displayed is the frequency that will be measured at A14J304 ROLLER TST with the HP 8562A/B in zero span.

Note

Because the three Roller loops are all interdependent, an error message displayed on screen might not be the primary cause of the failure. Be sure to query the error message buffer for all encountered errors by pressing (RECALL), MORE, RECALL ERRORS and using the knob or step keys to scroll through all encountered errors. The frequency displayed for the Offset Roller using the above procedure is the Offset Roller frequency/100.

During the LO ADJUST sequence performed at power-on, pretune-DAC-values for Roller Oscillator frequencies, spaced 2 MHz apart, are determined and stored. Pretune-DAC-values for frequencies locked during instrument operation are interpolated from these calibration values. Tuning sensitivities for the Main and Offset Rollers are determined and used to adjust the Roller Span Attenuator DAC U114B to improve span accuracy.

Confirming an Unlocked Condition

1. Set the HP 8562A/B to the following settings:

   CENTER FREQ ..... 300 MHz
   SPAN ..... 0 Hz

2. Connect A14J304 ROLLER TST to the input of a synthesized spectrum analyzer and view the Roller Oscillator output at 94.7 MHz.

Note

If a synthesized spectrum analyzer is not available, connect A14J304 to the input of a 20 dB gain amplifier, such as an HP 8447E. Connect the output of the amplifier to the input of a frequency counter.

3. If the Roller Oscillator measures a stable 94.7 MHz, the Roller Oscillator PLLs are probably locked.
4. If the Roller Oscillator is off-frequency or unstable and no error message is displayed, check Roller MUX U305, Roller MUX Amplifier U328, and MUX Gain Control Switch U328B. Refer to Function Block AG of A14 Frequency Control Schematic (sheet 5 of 5).

Note Although J304 is the output of the Main Roller Oscillator, an unstable signal here does not necessarily mean the Main Roller Oscillator is unlocked; the Main Roller Oscillator will track the frequency movements of the other two Roller PLLs.

Offset Oscillator PLL

The Offset Oscillator PLL provides a synthesized frequency in the range of 189 MHz to 204 MHz in 2.5 kHz steps. This frequency is divided by 100 to provide a 1.89 MHz to 2.04 MHz signal with 25 Hz resolution to the Main Oscillator PLL. It is swept in LO spans ≤100 kHz.

1. Confirm an output from the Offset Oscillator at the points listed below. Refer to Function Block AE of A14 Frequency Control Schematic (sheet 5 of 5).

   A14TP302 (A14A101) ..... 189 MHz to 204 MHz
   U102 pin 2 ..... 189 MHz to 204 MHz (>−3 dBm)

2. Measure the Offset Amp and Offset Osc Bias voltages at the following test points:

   A14J302 pin 5 (Offset Amp Bias)..... between +2 and +4 V dc
   A14J302 pin 2 (Offset Osc Bias)..... between +7 and +8 V dc

3. The oscillator's power level, measured with an active probe at TP302, should measure −15 dBm.
4. Set the HP 8562A/B to the following settings:

   CENTER FREQ ..... 300 MHz
   SPAN ..... 0 Hz

5. Measure the unlocked Offset Oscillator's frequency at A14TP302. If the frequency is not 200 MHz ±10 MHz, short U416 pin 14 to ground. Refer to Function Block AD of A14 Frequency Control Schematic (sheet 5 of 5).
6. The Offset Oscillator's frequency should measure 200 MHz ±1 MHz. If the frequency is not in this range, measure the pretune voltage at J302 pin 15.
7. If the pretune voltage is not −5.25 ±1.75 V dc, troubleshoot U126B, U119B, and the offset pretune DAC address decoder U302. Refer to Function Block AF of A14 Frequency Control Schematic (sheet 5 of 5) and Function Block B of A14 Frequency Control Schematic (sheet 2 of 5).

Note If the Transfer Roller Oscillator is locked, the address decoder is not at fault. Address decoder U302 decodes a single address for both the Offset Oscillator Pretune DAC and the Transfer Oscillator Pretune DAC.

8. If the pretune voltage is within the range listed in step 7, the Offset Oscillator is probably at fault.

9. Measure the Offset Oscillator's frequency at A14TP302. If the frequency is not 200 MHz ±10 MHz, connect a frequency counter to U101 pin 3 (using a ×10 oscilloscope probe). Place the counter in the high-input impedance function.

10. Set the HP 8562A/B to the following settings:

    CENTER FREQ ..... 300 MHz
    SPAN ..... 0 Hz

11. Check that U101 pin 1 is high. This indicates that prescaler U101 is in the divide by 128 mode. Refer to Function Block AC of A14 Frequency Control Schematic (sheet 5 of 5).

12. The signal's frequency at U101 pin 3 should be the Offset Oscillator's frequency divided by 128. The frequency would be 1.562500 MHz if the Offset Oscillator was locked at 200 MHz.

13. The amplitude of the signal at U110 pin 3 should measure greater than 1 V p-p.

Note Integrated circuit U110 contains the reference and VCO dividers, phase detector and modulus (pre-scaler) control circuitry.

---

14. Set the HP 8562A/B to a to the following settings:

    CENTER FREQ ..... 300 MHz
    SPAN ..... 0 Hz

15. Check that there are narrow (<1 μs) pulses 400 μs apart at U110 pin 18 (reference divider output) and U110 pin 15 (VCO divider output). Refer to Function Block AC of A14 Frequency Control Schematic (sheet 5 of 5).

16. Short A14A101 pin 14 of the Offset Oscillator to A14A101 pin 20. This sets the Offset Oscillator's TUNE+ line at +10 V, setting the Offset Oscillator to its maximum frequency.

17. The error voltage measured at U111 pin 1 should be greater than +9 V dc.

18. Short A14A101 pin 14 of the Offset Oscillator to ground. The error voltage at U111 pin 1 should measure less than −9 V dc.

Note Under some unlocked conditions, the Offset Oscillator loop may appear to become unstable. (The error voltage will oscillate wildly.) This is normal behavior brought on by the conduction of zener diodes VR308 and VR309 which short out R336 to improve the lock time.

---

19. Remove the shorts from A14A101.

20. Set the HP 8562A/B to the following settings:

    CENTER FREQ ..... 300 MHz
    SPAN ..... 0 Hz

21. Check that the voltage at U112 pin 5 is the same as that on U112 pin 3.

22. Set the HP 8562A/B to a span of 100 kHz.

Note

A14U112 is a sample-and-hold IC that stores the phase-lock error voltage during offset sweeps (≤100 kHz). Refer to Function Block AD of A14 Frequency Control Schematic (sheet 5 of 5). When the loop is locked, U112 is in the hold mode and U112 pin 8 should be low.

23. Trigger a dual-trace oscilloscope from U112 pin 8 (OFFHOLD), and observe the sample-and-hold action on U112 pins 3 and 5.
24. If ERRs 302 or 327 are displayed and the Offset Oscillator loop is locked, troubleshoot Roller MUX U305, MUX Amp U328, and MUX Gain Control Switch U326B. Refer to Function Block AG in A14 Frequency Control Schematic (sheet 5 of 5).
25. If U305, U328, and U326B are working properly, suspect a malfunction of the A3 Interface Assembly or the W2 Control Cable.

Transfer Oscillator PLL

The Transfer Oscillator PLL provides a synthesized signal from 65 MHz to 110 MHz in 50 kHz steps. This signal mixes with the Main Roller PLL's output, producing the roller IF at approximately 2 MHz. The roller IF is compared to the Offset Oscillator's divided output to phase-lock the main-roller oscillator.

1. Use an active probe (or sniff loop) connected to a spectrum analyzer to test for an output from the A14A102 Transfer Oscillator. The amplitude at TP301 should be approximately −4 dBm. Refer to Function Block AI of A14 Frequency Control Schematic (sheet 5 of 5).
2. The voltage at J302 pin 1, XFER OSC BIAS, should measure +7.5 V dc ±1 V.
3. If the Transfer Oscillator's output contains noise sidebands, phase noise, or jitter, troubleshoot switches Q102 and Q103 in Function Block AK and Q104 in Function Block AN.
4. Set the HP 8562A/B to the following settings:

   CENTER FREQ ..... 300 MHz
   SPAN ..... 0 Hz

5. If the Transfer Oscillator's frequency at TP301 is 96.7 MHz ±2 MHz, the oscillator is unlocked. Refer to Function Block AI of A14 Frequency Control Schematic (sheet 5 of 5).
6. If the Transfer Oscillator frequency is not within the range in step 5, short A14A102 pin 12.
7. If the Transfer Oscillator frequency is not 96.7 MHz ±1 MHz, check that the Transfer Oscillator pretune voltage at J302 pin 13 is +13.6 V dc ±1.8 V.
8. If the pretune voltage is not within the range in step 5, check U119A, U122A, Q102, Q103 and the Transfer Oscillator Pretune DAC address decoder, U302. Refer to Function Block AK of A14 Frequency Control Schematic (sheet 5 of 5).
9. If the Offset Roller is locked, then the address decoder is correct; U302 decodes a single address for both the Offset Oscillator Pretune DAC and the Transfer Oscillator Pretune DAC.
10. If the pretune voltage is within the range in step 5, the A14A102 Transfer Oscillator is probably defective.

11. If the Transfer Oscillator's frequency, measured at A14TP301, is 96.7 MHz ±2 MHz, set the HP 8562A/B to the following settings:

    CENTER FREQ ..... 87.3 MHz
    SPAN ..... 0 Hz

12. Use a frequency counter/X10 oscilloscope probe combination to measure the frequency at U127 pin 3. (Place the counter in the high-input impedance mode.)

13. The measured frequency should equal the Transfer Oscillator frequency divided by 32.

14. Confirm that U127 pin 1 is high. The signal amplitude at U127 pin 3 is ≥1 V p-p.

15. Set the HP 8562A/B to the following settings:

    CENTER FREQ ..... 300 MHz
    SPAN ..... 0 Hz

Note Integrated circuit U124 contains the reference dividers, VCO dividers, phase detector, and modulus (pre-scaler) control circuitry. Refer to Function Block AH of A14 Frequency Control Schematic (sheet 5 of 5).

16. Check for narrow (<1 μs) pulses 20 μs apart at U124 pin 18 (reference divider output) and pin 15 (VCO divider output).

17. Short U126 pin 3 to ground. The voltage at U126 pin 1 should be <−9.5 V dc.

18. Short U126 pin 2 to ground. The voltage at U126 pin 1 should be +9.5 V dc.

19. If ERR 303 is displayed and the Transfer Oscillator loop is locked, troubleshoot Roller MUX U305, MUX Amp U328, and MUX Gain Control Switch U326B. Refer to Function Block AG in A14 Frequency Control Schematic (sheet 5 of 5).

20. If U305, U328, and U326B are working properly, suspect a malfunctioning A3 Interface Assembly or W2 Control Cable.

Main Oscillator PLL

The Main Oscillator PLL provides an output signal in the range of 63 MHz to 106 MHz. This signal is the reference to the YTO PLL. The Sampler IF signal from the A15 RF Assembly is compared to this signal in the YTO Loop providing an error voltage to phase-lock the YTO.

The Main Oscillator PLL's sample-and-hold function is performed digitally using two DACs, U113A Coarse Adjust and U113B Fine Adjust. When the Main Roller Oscillator is locked after retrace and before the start of a Main Roller span, these DACs are adjusted to zero. When the PLL error voltage is zero it provides no frequency correction and can thus be disconnected (via switch U116A) without affecting the Main Roller frequency. The span ramp is then applied to sweep the Main Roller over the desired range.

Assuming the DACs and their address decoder are working properly, suspect a bad calibration performed in the power-on sequence, an unstable Main Roller loop or Oscillator, or an intermittent failure in the Main Roller PLL circuitry.

Note Before proceeding with the following steps, confirm that the Roller Oscillator PLL's Transfer Oscillator PLL and Offset Oscillator PLL loops are locked.

1. Measure the signal power at A14J304. The signal should measure greater than −33 dBm.
2. Measure the signal at A14TP305. The signal's nominal power should measure 0 dBm.
3. If the output of A14TP305 is not correct, confirm that the voltage at J303 pin 1, Out Amp Bias, is between +3 V dc and +6 V dc. Refer to Function Block AO of A14 Frequency Control Schematic (sheet 5 of 5).
4. Confirm that the voltage at J303 pin 2, Main Osc Bias, is +6 V dc ±1 V.
5. Set the HP 8562A/B to the following settings:

   CENTER FREQ ..... 300 MHz
   SPAN ..... 0 Hz

6. Confirm that the voltage at A14A103 pin 14, TUNE+, is +12.6 V dc ±~~1.4~~ 2.4V V. Refer to Function Blocks AO and AN of A14 Frequency Control Schematic (sheet 5 of 5).
7. If TUNE+ is within range, short A14A103 pin 12 to ground.
8. Measure the frequency at C345 (lead closest to mixer U117) with a frequency counter and a ×10 oscilloscope probe.
9. If the frequency is not within 94.7 MHz ±1 MHz, the Main Roller Oscillator, A14A103, is probably defective.
10. Set the HP 8562A/B to the following settings:

    CENTER FREQ ..... 300 MHz
    SPAN ..... 0 Hz

11. Measure the PLL's IF amplitude at U109 pin 1 with an oscilloscope and a ×10 oscilloscope probe. A 50 mV signal at approximately 2 MHz should be observed.
12. If the PLL's IF is not correct, check for Transfer Oscillator drive at U117 pin 1 (−13 dBm nominal drive).
13. If the Transfer Oscillator drive signal is not present, check the XFER AMP BIAS at J303 pin 3. The voltage should measure +2 V dc to +4 V dc.
14. Check that the voltage at U424B pin 7 is nominally −14 V dc. Diodes CR302 and CR303 form a PIN diode switch that turns off the Transfer Oscillator drive to the mixer in Main Roller Spans (100 kHz <LO Span ≤1 MHz). Refer to Function Block AI of A14 Frequency Control Schematic (sheet 5 of 5).
15. Check that control signal XFEROSCSW is near 0 V (U424B pin 5). If XFEROSCSW is not near 0 V, check the Roller Interface Latch U401 and its address decoder U303. Refer to Function Block AG of A14 Frequency Control Schematic (sheet 5 of 5) and Function Block B of A14 Frequency Control Schematic (sheet 2 of 5).
16. If the signal amplitude at U109 pin 1 (refer to step 11) is within range and near 2 MHz in frequency, measure the voltage at U109 pin 7. The voltage should nominally be 100 mV p-p.

17. The waveform at U106 pin 7 should be a square wave with a lower limit between 0 V and +0.5 V and an upper limit between +3 V and +5 V. Refer to Function Block AL of A14 Frequency Control Schematic (sheet 5 of 5).
18. The signal at U105 pin 1 should have a similar waveform as U106 pin 7, but may be different in amplitude from the Offset Oscillator Dividers U103 and U104.
19. The Offset Oscillator Divider, Function Block AJ, is probably at fault if the signal at U105 pin 1 is not present and the Offset Roller is locked.
20. If the input signals to the Main Roller Phase Detector U105 (measured in steps 17 and 18) are in range, check for narrow (<0.1 μs) pulses 0.5 μs apart on U105 pins 2 and 13.
21. Short U115B pin 5 to ground and check that U115B pin 7 is nominally −9.1 V dc.
22. Short U115B pin 6 to ground and check that U115B pin 7 is nominally +9.1 V dc.
23. If ERR 304 is displayed and the Main Oscillator PLL is locked, troubleshoot Roller MUX U305, MUX Amp U328, and MUX Gain Control Switch U326B. Refer to Function Block AG in A14 Frequency Control Schematic (sheet 5 of 5).
24. If U305, U328, and U326B are working properly, suspect a malfunction of the A3 Interface Assembly or the W2 Control Cable.

Unlocked Offset PLL (Sampling Oscillator)

Operation

The Offset PLL drives the A15A2 Sampler. The Offset PLL's sampling oscillator tunes to one of fifteen discrete frequencies between 280 MHz and 298 MHz. Refer to A15 Schematic (sheet 4 of 4). Mixer A15U400 mixes the oscillator's output with 300 MHz from the Reference PLL, producing a 2 MHz to 20 MHz IF signal. The 2 MHz to 20 MHz signal is divided down to 2 MHz or 2.5 MHz and compared in the phase/frequency detector with the divided-down 10 MHz from the Reference PLL. The phase/frequency detector drives a voltage-to-current (V/I) diode switch which drives the loop integrator. Loop bandwidth switches vary the loop bandwidth to minimize noise sidebands. The sampling oscillator must produce low noise because the A15A2 Sampler multiplies noise by a factor of approximately 24.

Table 11-15 lists the divide ratios and control-line settings for each of the 15 discrete frequencies to which the Offset PLL may be set.

Troubleshooting

1. Use an active probe and spectrum analyzer to confirm the presence of the following references to the Offset PLL's input.

   A15TP404 ..... 300 MHz at +5 dBm
   A15TP408 ..... 10 MHz TTL-level

2. If either of these signals is not correct, refer to "Unlocked Reference PLL."
3. Force the PLL to unlock by shorting A15X201 pin 1 to A15X201 pin 5 with a short length of wire.

4. Connect a dc power supply to A15J200 pin 16.
5. Monitor A15TP201 with an active probe/spectrum analyzer combination. Vary the dc supply until the frequency of the sampling oscillator is 280 MHz.
6. The voltage required to tune the oscillator should measure between +2 V dc and +8 V dc. If the voltage is out of this range, perform the Sampling Oscillator Adjustment in Chapter 2.
7. Vary the voltage to tune the sampling oscillator to 280 MHz.
8. Use an active probe/spectrum analyzer combination to measure the 300 MHz LO signal at the following test point:

   A15TP402 ..... +7 dBm

9. If the signal is not measured near the indicated power, troubleshoot the Offset Lock Loop Buffer (Function Block AM of A15 RF Schematic sheet 4 of 4).

Table 11-15. Sampling Oscillator PLL Divide Ratios

Sampling Oscillator Freq. (MHz)	Center Freq.* (MHz)	Divide Ratios		TP 406, TP 407** (MHz)	N Control Lines			M Control Lines	
		N	M		B1	B2	B3	B4	B5
280.0	389.5	8	4	2.5	high	high	high	high	low
282.5	427.0	7	4	2.5	low	high	high	high	low
284.0	449.5	8	5	2.0	high	high	high	low	high
285.0	464.5	6	4	2.5	high	low	high	high	low
286.0	479.5	7	5	2.0	low	high	high	low	high
287.5	502.0	5	4	2.5	low	low	high	high	low
288.0	509.5	6	5	2.0	high	low	high	low	high
290.0	539.5	5	5	2.0	low	low	high	low	high
292.0	569.5	4	5	2.0	high	high	low	low	high
292.5	577.0	3	4	2.5	low	high	low	high	low
294.0	599.5	3	5	2.0	low	high	low	low	high
295.0	614.5	2	4	2.5	high	low	low	high	low
296.0	629.5	2	5	2.0	high	low	low	low	high
297.5	652.0	1	4	2.5	low	low	low	high	low
298.0	659.5	1	5	2.0	low	low	low	low	high

*To set the Sampling Oscillator to a desired frequency, set the span to 0 Hz and the CENTER FREQ to the value listed in the table.

**The signals at TP406 and TP407 are TTL levels.

10. Measure the 280 MHz loop-feedback signal at the following test point:

A15TP400 ..... 0 dBm

11. If the feedback signal is not near the indicated power, measure the signal at the following test points on the feedback path. Refer to Function Blocks AD, AG, and AH of A15 RF Schematic (sheet 4 of 4).

    A15TP200 ..... +7 dBm
    A15TP201 ..... ~~+17 dBm~~ 11 dBm
    A15TP202 ..... ~~+8 dBm~~ 3.2 dBm

12. Measure the 20 MHz loop-IF signal at the following test point:

    A15TP401 ..... −6 dBm

13. If the IF signal is not near the indicated power, troubleshoot the loop mixer (Function Block AI).

14. Measure the loop-IF signal at the input to the IF Amp./Limiter (Function Block AK):

    U401 pin 2 ..... 20 MHz (approximately −6 dBm)

15. Confirm the presence of a 20 MHz square-wave signal at TP405. The square wave should go from +0.6 V to +2.2 V.

16. Set HP 8562A/B to the following settings:

    CENTER FREQ ..... 369.3 MHz
    SPAN ..... 0 Hz

17. Use an oscilloscope to confirm the presence of a 2.5 MHz TTL-level signal at TP406.

18. Confirm the presence of a 2.5 MHz TTL-level signal at TP407.

19. Force the loop's phase/frequency detector to a lock condition by unsoldering one end of R436. Resistor R436 is located at the base of Q402 in Function Block AK of A15 RF Schematic (sheet 4 of 4). This opens the path between the Sampling Oscillator and the phase/frequency detector.

20. If the dc power supply is connected to A15J200 pin 16, disconnect the power supply.

21. Connect A15TP406 to A15TP407. This forces both phase/frequency detector inputs to the same 2.5 MHz signal.

22. Observe the phase/frequency detector outputs, U406 pins 5 and 8, with an oscilloscope. Narrow TTL pulses should be present. Pin 5 is normally low, pulsing high, and pin 8 is normally high, pulsing low.

23. Check the cathode of CR401 with an oscilloscope. With the oscilloscope's input ac-coupled, a sawtooth waveform approximately 5 mV p-p should be present.

24. Short C441 with a wire jumper. This changes loop integrator into a voltage follower. Refer to Function Block AB of A15 RF Schematic (sheet 4 of 4).

25. The voltage at A15J200 pin 15 should measure +1.8 V dc. Adjust A15R453 PHASE DET BIAS if necessary for +1.8 V dc.

26. If the voltage at U408 pin 2 is not +1.8 V dc, suspect U408.

27. Check the voltages at the following points:

    A15U408 pin 6 ..... +2 V dc (approximately)
    A15J200 pin 16 ..... +2 V dc (approximately)

Unlocked Reference PLL

Operation

The Reference PLL's 600 MHz output is generated by a 600 MHz SAWR (Surface Acoustical Wave Resonator) VCO. The SAWR provides a high Q feedback path in the oscillator ensuring good phase noise. If the oscillator is off-frequency, the phase-lock circuitry is probably at fault. If there is no signal present at A15J701, or if the level is less than −3 dBm, the oscillator has failed. Transistor Q703 provides active bias for oscillator transistor Q701. Transistor Q704 provides active bias for 600 MHz buffer amplifier Q702. Refer to Function Blocks Q and R of A15 RF Schematic (sheet 3 of 4).

Troubleshooting

1. If Q701 and Q703 are functioning, check the bias on varactors CR701 and CR702. The varactors should be reverse-biased between 0 V and 18 V, depending on tune voltage.
2. If the active devices are functioning properly, check the SAWR by placing a 100-ohm resistor across U701 pins 1 and 2. This bypasses the SAWR, but provides the equivalent loss of a correctly functioning SAWR.
3. If the oscillator begins to oscillate, the SAWR is probably defective.
4. Set HP 8562A/B's 10 MHz reference to INT.
5. Measuring tune line voltage (LO3 ERR) indicates if the Reference PLL is locked. Measure the voltage at A15J502 pin 3. Connect the ground lead to A15J502 to pin 6.
6. If voltage is not between 0 V and 5.75 V the loop is unlocked and ERR 333 600 UNLK should be displayed on the CRT.
7. If the 600 MHz oscillator is working, the reason for the unlocked condition is either a problem in the 10 MHz Reference or a fault in the signal path around the loop.
8. Set HP 8562A/B's 10 MHz reference to INT.
9. Check the 10 MHz reference frequency-accuracy by connecting a frequency counter to A15J301 and verify that the reference frequency is 10 MHz ±40 Hz after a 5 minute warmup period.
10. If a 10 MHz TTL level signal is not present, refer to the "10 MHz Reference" in Chapter 12.
11. Measure the signal on U504 pin 3 with an oscilloscope. Refer to Function Block O of A15 RF Schematic (sheet 3 of 4).
12. Measure the signal at U504 pin 11 with an oscilloscope. Refer to Function Block O of A15 RF Schematic (sheet 3 of 4).
13. If TTL-level signals (approximately 10 MHz) are not present, check signals backwards through the loop to find a fault in the signal path.
14. Use an oscilloscope to check for 10 MHz ECL level at U503 pin 3. Refer to Function Block X of A15 RF Schematic (sheet 3 of 4).
15. Measure the signals at the following test points with an active probe/spectrum analyzer combination. Although the HP 1120A Active Probe is not specified beyond 500 MHz, it

can be used to observe the 600 MHz signal at TP701. The signal level at TP701 should be sufficient to drive an ECL input.

TP506 ..... 50 MHz, ≥+3 dBm
U502 pin 15 ..... 300 MHz, ≥+3 dBm
TP503 ..... 300 MHz, approximately +8 dBm
TP502 .....300 MHz (ECL level), approximately +3 dBm
TP701 ..... 600 MHz

16. If an approximately 10 MHz TTL signal is present at U504 pin 11, and the RF portion of the phase-lock loop is functioning, the fault probably lies in the Phase/Frequency Detector or the 600 MHz Reference Loop Amplifier.

17. Monitor U504 pins 5 and 9 with an oscilloscope. These are the two outputs of the Phase/Frequency Detector. Refer to Function Block O of A15 RF Schematic (sheet 3 of 4).

18. A locked loop will exhibit stable, narrow (approximately 20 μs wide), and positive-going TTL pulses occurring at a 10 MHz rate at U504 pins 5 and 9.

19. If the loop is unlocked, but signals are present on both inputs of the Phase/Frequency Detector, the outputs pulses will be superimposed on each other.

20. If the loop is unlocked, and there is no signal at one of the Phase/Frequency Detector inputs, one phase detector output will be at TTL low and the other will be at TTL high. For example, if there is no input signal at U504 pin 3, U504 pin 5 will be TTL low and U504 pin 9 will be TTL high. If there is no input signal at U504 pin 11, U504 pin 9 will be TTL low and U504 pin 5 will be TTL high.

21. To remove the 10 MHz reference input to the Phase/Frequency Detector, set the analyzer 10 MHz reference to **EXT** with no signal applied to the rear-panel 10 MHz REF IN/OUT connector.

22. To remove the divided-down 600 MHz signal from the Phase/Frequency Detector, remove C519 from X501. Refer to Function Block W of A15 RF Schematic (sheet 3 of 4).

23. Remove 10 MHz reference input to the Phase/Frequency Detector by switching HP 8562A/B's 10 MHz reference to **EXT**. No signal should be connected to the rear-panel 10 MHz REF IN/OUT connector.

Note

The outputs of Phase/Frequency Detector are low-pass filtered to reduce the 10 MHz component of the signal. The filtered signals are then integrated by U506 and the result is fed to the tune line of the 600 MHz oscillator.

---

24. Check that the voltage on A15J502 pin 3 is approximately −6 V dc. Refer to Function Block P of A15 RF Schematic (sheet 3 of 4).

25. Set the HP 8562A/B's 10 MHz reference to **INT** and remove the divided-down 600 MHz input to the phase/frequency detector by removing C519 from X501.

26. Check that the voltage on A15J502 pin 3 is approximately 7 Volts.

27. Replace C519 in X501.

28. If the loop is locked, the voltage on A15J502 pin 3 should be between 0 V and +5.75 V dc.

29. If the front-panel CAL OUTPUT amplitude is out of specification and cannot be brought within specification by adjusting A15R561, CAL AMPTD, check the Calibrator AGC Amplifier with the following steps. Refer to Function Block W of A15 RF Schematic (sheet 3 of 4).

Note

The 300 MHz CAL OUTPUT signal comes from the divided down 600 MHz which is passed through a leveling loop. The 300 MHz signal passes through a low-pass filter for reducing higher harmonics. These harmonics can fool the detector. The 300 MHz signal passes through a variable attenuator controlled by PIN diode CR503 which is controlled by the feedback loop. Diode CR504 is the detector diode (the same type as CR505). Diode CR504 provides temperature compensation between the reference voltage and the detected RF voltage.

a. Measure the level of 300 MHz at A15 TP505 with an active probe/spectrum analyzer combination. If the signal is less than +2 dBm, be sure to perform the beginning steps of this procedure.
b. If the signal at this point is correct, place a short across the PIN diode CR503.
c. If the signal level at the CAL OUTPUT is still less than −10 dBm with CR503 shorted out, troubleshoot the RF forward path through amplifier Q505.
d. If the CAL OUTPUT signal level is greater than −10 dBm, troubleshoot the PIN diode attenuator, the detector, or the feedback path.

30. Measure the detector voltage at A15J502 pin 14. The voltage should measure approximately +0.3 V dc when the CAL OUTPUT signal is at −10 dBm. This voltage should change with adjustment of A15R561, CAL AMPTD.

31. Check that the voltage at U507A Pin 3 is +1.7 V dc. If this voltage is not correct, there may be a problem with the +10 V reference.

32. Measure voltage at U507B pin 5 while adjusting R561. This is the temperature-compensated adjustable voltage reference to which the detected voltage is compared. It should vary between +1.3 V and −0.6 V.

33. Adjust R561 to its limits and verify that the output U507B pin 7 measures approximately +9 V dc at one limit and −12 V dc at the other limit.

Third LO Driver Amplifier

The Third LO Driver Amplifier (Q503) amplifies the 300 MHz from the 600 MHz phase-lock loop to a sufficient level to drive the LO port of the Double Balanced Mixer. During the SIG ID operation, diodes CR501 and CR502 turn off the 3rd LO Driver Amplifier in order to minimize the amount of 300 MHz going to the double- balanced mixer.

1. Set the HP 8562A/B's `SIG ID OFF`.

2. Use an active-probe/spectrum-analyzer combination to confirm the power level of the 300 MHz signal at the following test points:

   A15TP602 ..... ≥+7 dBm
   A15TP504 ..... ≥+15 dBm

3. If the signal at A15TP602 is low, but the signal at A15TP504 is correct, set `SIG ID OFF`.

4. Check that PIN diode switches CR603 and CR605 are reverse biased by approximately +10 V dc. Refer to Function Block F of A15 RF Schematic (sheet 2 of 4).
5. Measure 300 MHz signal at A15TP503 using an active probe/spectrum analyzer combination. If the signal is not approximately +10 dBm, refer to "Unlocked Reference PLL".
6. If the level at the TP503 is correct, but signal at TP504 is too low, the fault is probably in the amplifier.

Sampler and Sampler IF

The A15A2 Sampler creates and mixes harmonics of the sampling oscillator with the first LO. The resulting sampler IF (63 MHz to 105 MHz) is used to phase-lock the YTO. The Sampler IF filters unwanted products from A15A2's output and amplifies the IF to a level sufficient to drive the YTO loop. When the IF is between 78 and 87 MHz, PIN diodes switch a 120 MHz notch filter in the sampler IF section.

1. Set HP 8562A/B to the following settings:

   CENTER FREQ ..... 300 MHz
   SPAN 0 Hz

2. Connect the input of a power splitter to A15J101. Connect W32 to one of the splitter outputs. Connect the other splitter output to the input of another spectrum analyzer.
3. If a 94.7 MHz signal, greater than −15 dBm, is not displayed on the other spectrum analyzer, set a microwave source to the following settings:

   Frequency ..... 4.2107 GHz
   Amplitude ..... −5 dBm

4. Connect the microwave source to A15A2J1. A 94.7 MHz signal at approximately 0 dBm should be displayed on the other spectrum analyzer. −3
5. Use an active probe/spectrum analyzer combination to measure the signal at the following test points:

   Reconnect W32 + remove spl. Hea?

   A15TP101 ..... 94.7 MHz, −25 dBm
   A15TP201 ..... 294 MHz, +17 dBm

6. If a correct signal is seen at A15TP201 but the signal at A15TP101 is wrong, proceed as follows:
   a. Use an oscilloscope to measure the signals at the following test points:
      A15J400 pin 1 ..... +1.8 V dc to +2.4 V dc (≤0.5 V p-p variation)
      A15J400 pin 3 ..... −1.8 V dc to −2.4 V dc (≤0.5 V p-p variation)
   b. If these levels are wrong, perform the "Power and Sampler Match Adjustments" in the Sampler Oscillator Adjustment procedure. Refer to Chapter 2.
   c. If adjusting the Sampler Match does not bring the signal at A15TP101 within specification when the signal at A15TP201 is correct, the A15A2 Sampler is defective.
7. If the signal at A15TP101 is correct, but the signal at A15J101 is wrong, the fault lies in the Sampler IF circuitry. Continue with the following steps.
8. Set the HP 8562A/B to the following settings:

CENTER FREQ ..... 300 MHz
SPAN ..... 0 Hz

9. Set a microwave source to the following settings:

   Frequency ..... 4.2107 GHz
   Amplitude ..... −5 dBm

10. Connect the microwave source to A15A2J1.

11. Measure the signal at U103 pin 1 using an active probe/spectrum analyzer combination.

12. If a 94.7 MHz signal, approximately −14 dBm, is present, but the signal at A15J101 is low, suspect U103.

13. When U104 pin 3 is at TTL low, U104 pin 6 should near −15 V dc and PIN diodes CR101, CR102, and CR103 should be reverse-biased.

14. Set HP 8562A/B to the following settings:

    CENTER FREQ ..... 89.3 MHz
    SPAN ..... 0 Hz

15. Check that U104 pin 3 is at a TTL high and U104 pin 6 is greater than +7 V. PIN diodes CR101, CR102, and CR103 should all be turned on with about 7 mA of forward current.

Sweep Generator Circuit

The Sweep Generator operates by feeding a constant current from DAC U307 into an integrator, U320B. See Function Block K of A14 Frequency Control Schematic (sheet 2 of 5). This current is scaled by resistors R20 through R24 and U312B/C/D. See Figure 11-10. The capacitors used in the integrator depend on the sweep- time range; smaller-value capacitors provide faster sweep times.

The integration is initiated by HSCAN going high. This opens U312A which places the output of U320A near −15 V dc, turning CR6 off and allowing the output of integrator U320B to ramp from 0 V to +10 V dc. The analyzer's ADC (via the scan ramp attenuator U320B pin 7) monitors the scan ramp at U325A pin 1. When the ramp reaches +10 V (for single-band sweeps), HSCAN is brought low and the integration ends. During normal non-fast-zero spans (sweep times >30 ms), comparators U319A and B are high. This turns on diodes CR1, CR2, CR3, and CR4. Note that the integrating current (maximum value 236 μA) actually flows backwards through diodes CR3 and CR4.

During retrace, HSCAN is low, closing U306B and U312A. See Figure 11-11. The output of U320A tries to go high, turning CR6 on and sourcing current through R26. This current discharges the capacitors in the integrator, forcing U320B pin 7 toward 0 V dc. Ultimately, the output of U320B will be brought and held to 0 V by U320A supplying a current equal to that which is sunk by the current source.

For more information, refer to "First-LO Span Problems (Multiband Sweeps)."

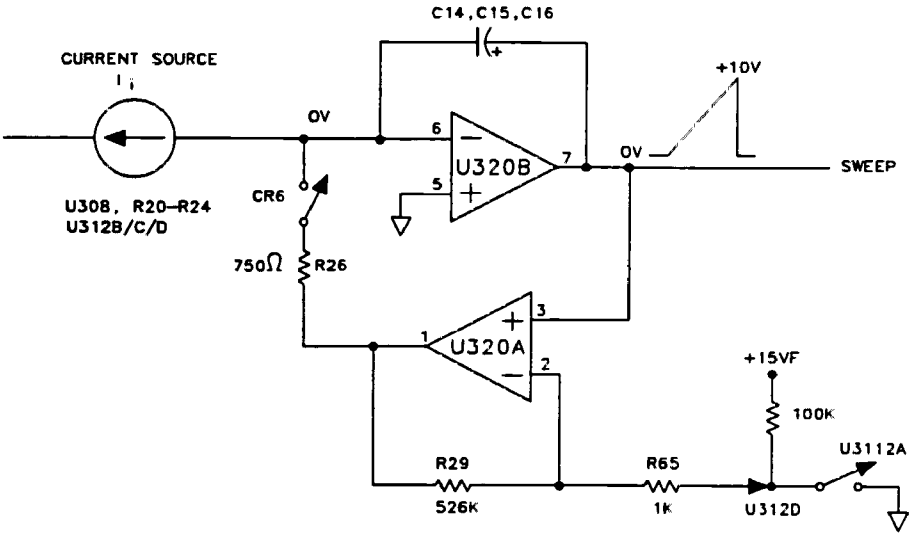

Figure 11-10. Simplified Sweep Generator

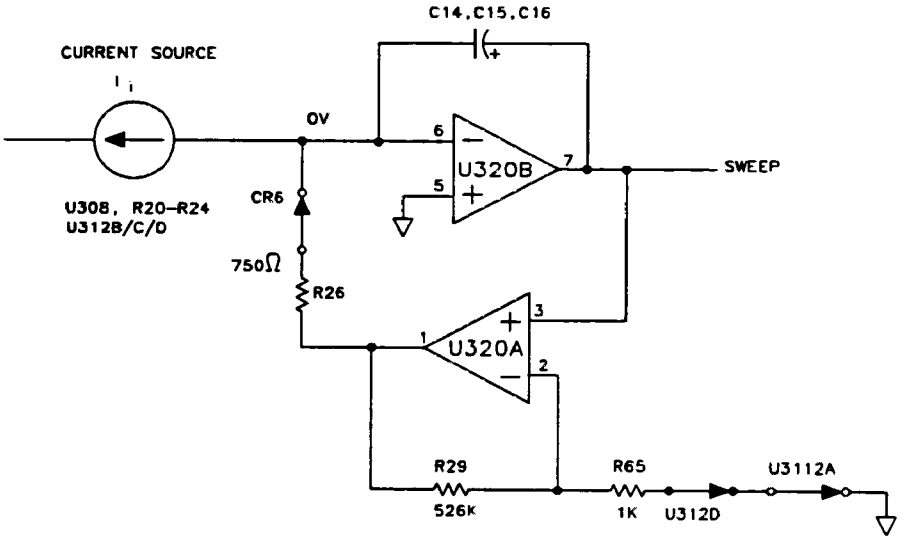

Figure 11-11. Simplified Sweep Generator During Retrace

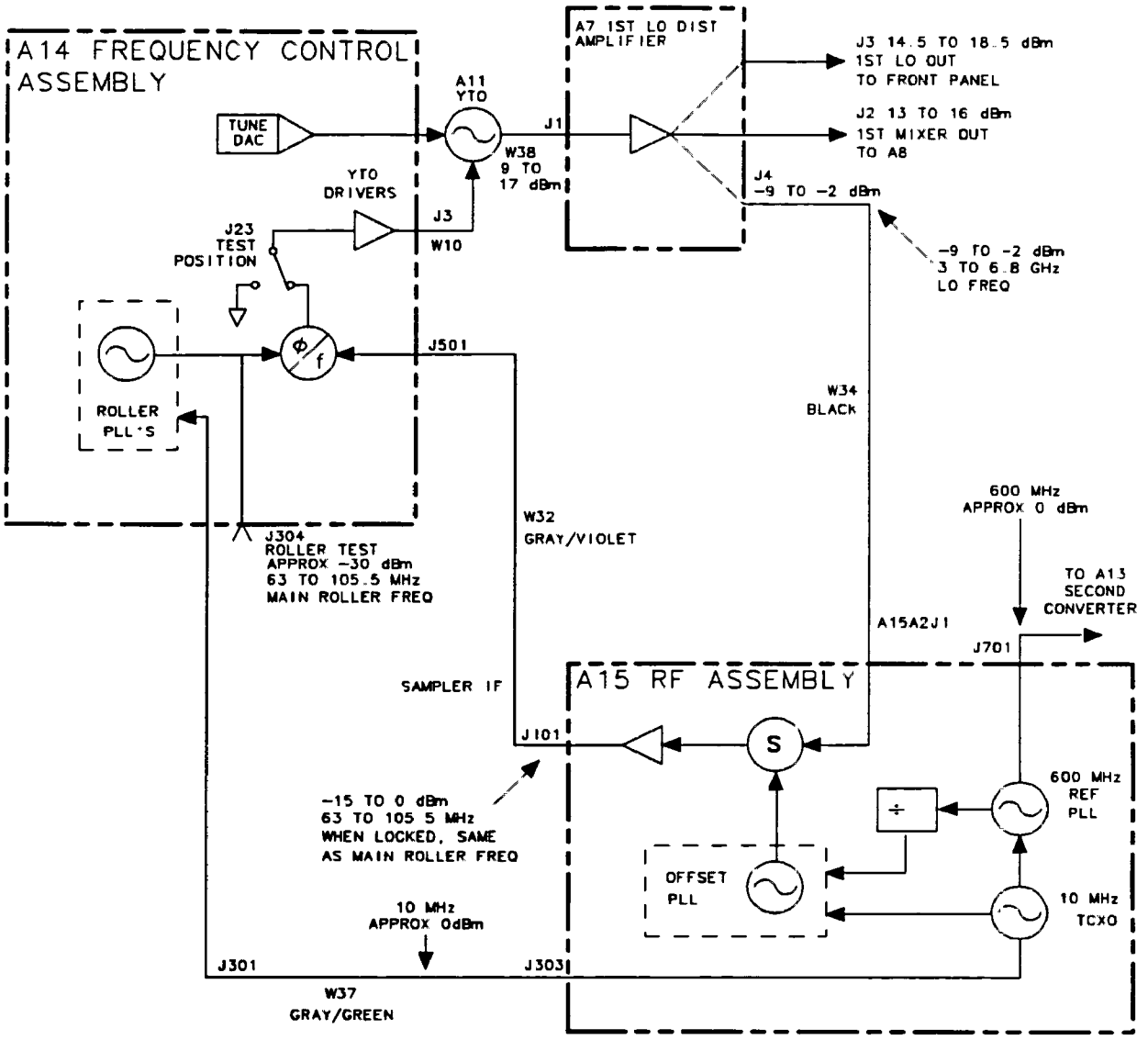

Figure 11-12. Simplified Synthesizer Section

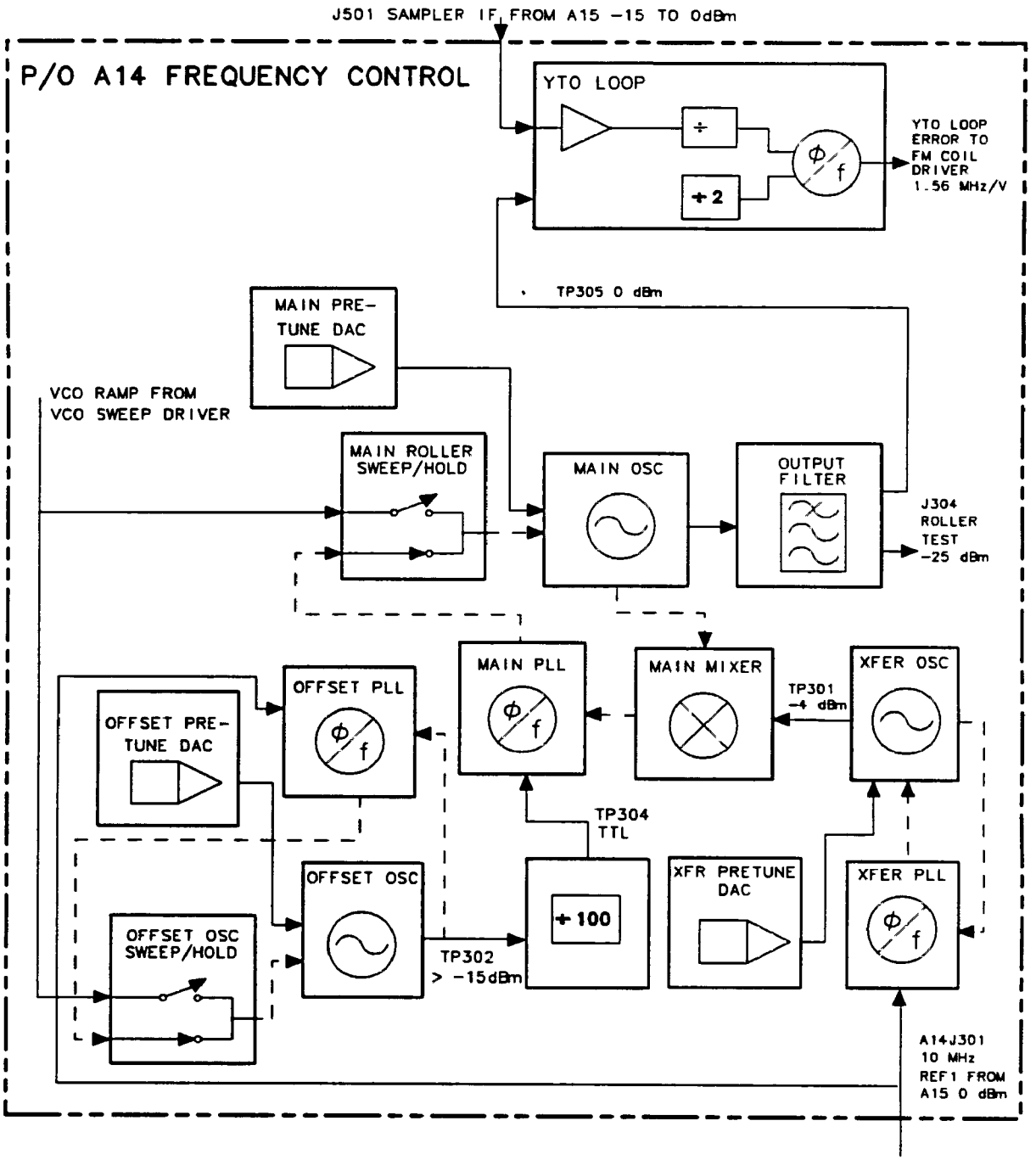

Figure 11-13. Simplified A14 Assembly Block Diagram

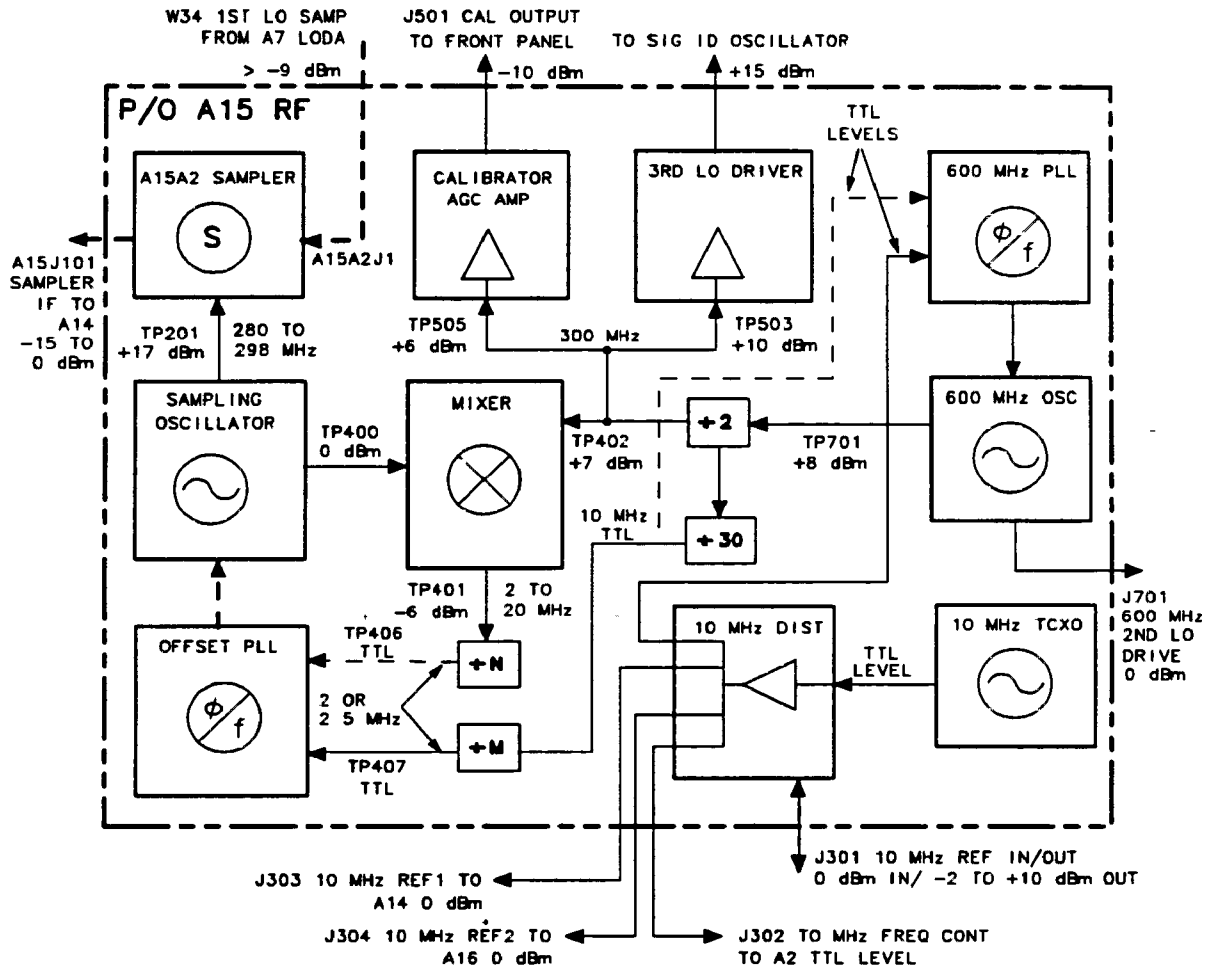

Figure 11-14. Simplified A15 Assembly Block Diagram

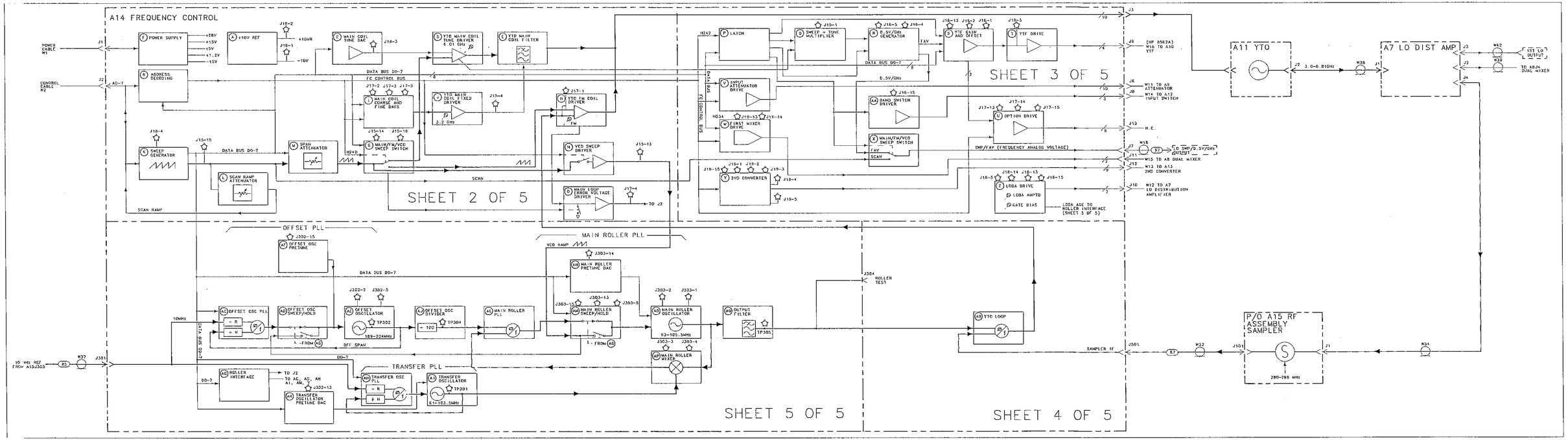

FIGURE 11-15. FREQUENCY CONTROL BLOCK DIAGRAM

RF ASSEMBLY BLOCK DIAGRAM

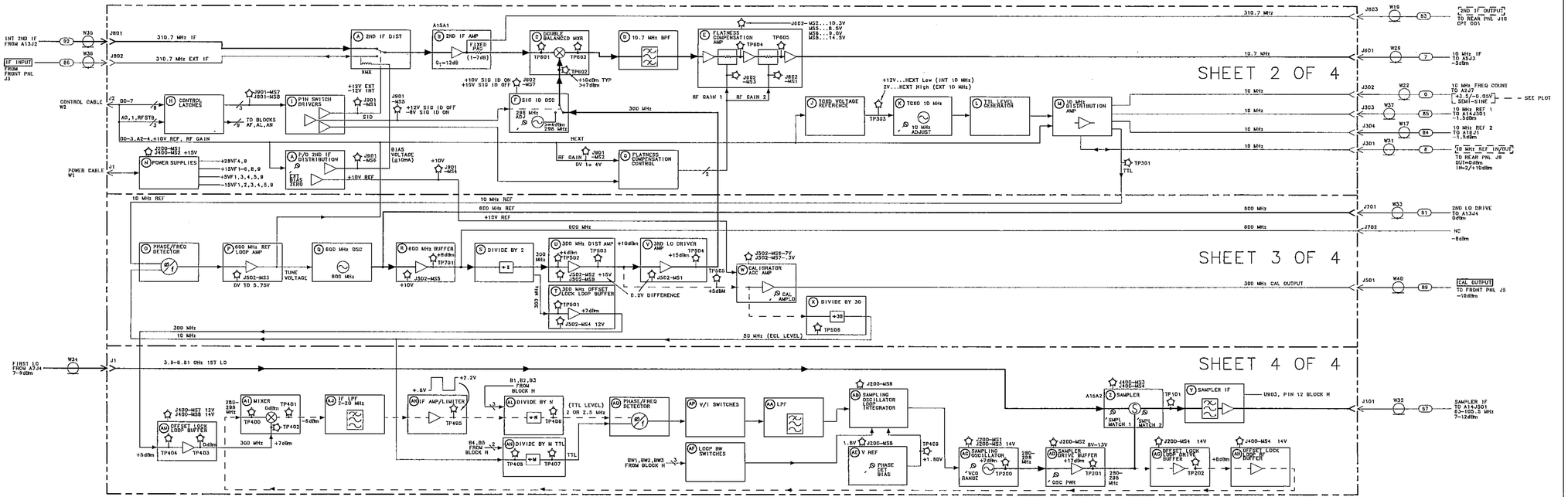

FIGURE 11-16. RF ASSEMBLY BLOCK DIAGRAM

12

RF Section

The RF Section converts the input signal to a 10.7 MHz IF (Intermediate Frequency). See Figure 12-3 for a detailed section block diagram. For schematics, component-locations, and replaceable parts lists for these boards, see the *HP 8562A/B Component-Level Information* manual.

Note The block diagrams for the A14 and A15 assemblies are located in Chapter 11, "Synthesizer Section".

	Page
Troubleshooting Using the TAM	12-2
Low Band Problems (1 kHz to 2.9 GHz)	12-4
High Band Problems (2.75 to 22 GHz)	12-5
Low and High Band Problems	12-5
A7 LODA (LO Distribution Amplifier)	12-6
A8 Dual Mixer	12-7
PIN Switch	12-7
High Band Bias	12-7
A9 Input Attenuator	12-8
A12 RF Switch	12-9
A13 Second Converter	12-10
A14 Frequency Control Assembly	12-12
A7 LODA Drive	12-12
Control Latch for Band-Switch Driver	12-13
YTF Driver Circuit	12-13
A15 RF Assembly	12-16
Confirming a Faulty Third Converter	12-16
Confirming Third Converter Output	12-17
Third Converter	12-17
Flatness Compensation Control	12-18
Control Latches	12-19
SIG ID Oscillator	12-19
10 MHz Reference	12-20

Caution Many of the RF assemblies are extremely sensitive to electrostatic discharge (ESD). For further information regarding electrostatic cautions, refer to "Electrostatic Discharge Information" in Chapter 1.

Caution

Use of an active probe, such as an HP 1120A, with another spectrum analyzer is recommended for troubleshooting the RF circuitry. Because some spectrum analyzers, such as the HP 8566A/B, HP 8569A/B and the HP 8562, have dc coupled inputs, either set the active probe for an ac coupled output or use a dc blocking capacitor (HP 11240B) between the active probe and the spectrum analyzer input.

Troubleshooting Using the TAM

When using Automatic Fault Isolation, the TAM indicates suspected circuits that need to be manually checked. Use Table 12-2 to locate the manual procedure.

Table 12-1 lists assembly test connectors associated with each Manual Probe Troubleshooting test. Figure 12-1 illustrates the location of A15's test connectors.

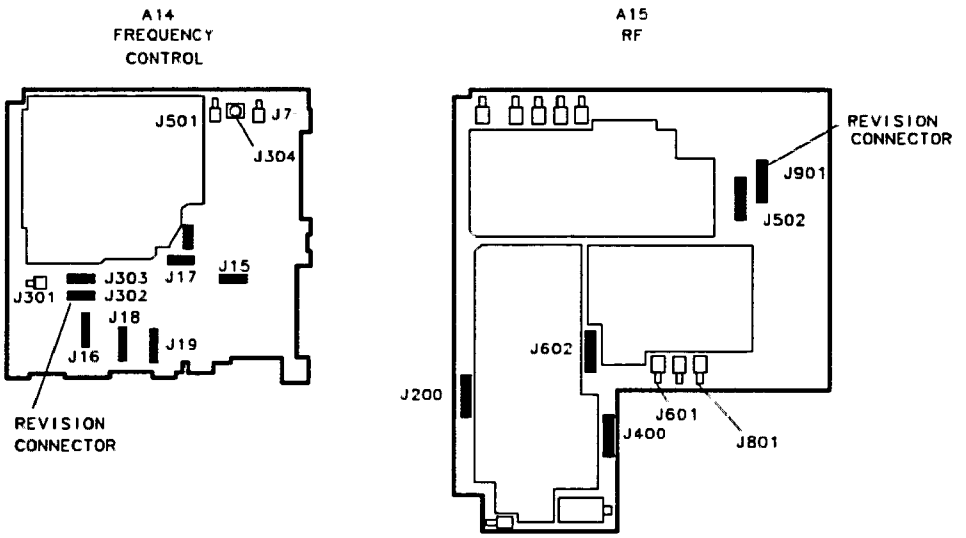

Figure 12-1. A14 and A15 Test Connectors

Table 12-1. Automatic Fault Isolation References

Suspected Circuit Indicated by Automatic Fault Isolation	Manual Procedure to Perform
Check 2nd IF Amplifier	Third Converter
Check 2nd IF Distribution	Third Converter
Check 10.7 MHz IF Out of Double Balanced Mixer	Third Converter
Check 300 MHz CAL OUTPUT	Calibrator Amplitude Adjustment in Chapter 2
Check A7 1st LO Distribution Amplifier	A7 LODA (LO Distribution Amplifier)
Check A8 Dual Mixer	A8 Dual Band Mixer
Check A9 Input Attenuator	A9 Input Attenuator
Check A12 RF Switch	A12 RF Switch
Check A13 Second Converter	A13 Second Converter
Check A13J2 INT 2nd IF	A13 Second Converter *(steps 1 to 6)*
Check A14 Latch	Control Latch for Band-Switch Driver
Check A15 Control Latches	Control Latches
Check A15J601 10.7 MHz	Third Converter Output
Check External 10 MHz Reference Operation	10 MHz Reference *(steps 5 to 11)*
Check Gain of Flatness Compensation Amplifier	Third Converter
Check High-Band Bias	High-Band Bias
Check INT 10 MHz Reference Operation	10 MHz Reference *(steps 1 to 4)*
Check LO Feedthrough	Low Band Problems *(steps 1 to 3)*
Check LO Power	Low and High Band Problems *(steps 4 to 9)*
Check PIN Switch	PIN Switch
Check PIN Switches in SIG ID Oscillator	SIG ID Oscillator
Check Second Converter Control	A13 Second Converter
Check SIG ID Oscillator	Signal ID Oscillator Adjustment in Chapter 2
Check SIG ID Oscillator Operation	SIG ID Oscillator
Check Third Converter	Low and High Band Problems *(step 11)*

Table 12-2. TAM Tests versus Test Connectors

Connector	Manual Probe Troubleshooting Test	Measured Signal Lines
A14J16	YTF Offset DAC	MS6
	YTF Gain and Offset Input	MS2
	YTF Gain DAC	MS1
	YTF Drive	MS3
	Band Switch Driver	MS8
A14J17	Main Coil Course DAC	MS3
A14J18	LODA Drive	MS5, MS6, MS7, MS8
A14J19	Second Conv PIN Switch	MS8
	Second Conv Mixer Bias	MS1
	Second Conv Drain Bias	MS3
	Second Conv Doubler Bias	MS4
	Second Conv Driver Bias	MS5
	First Mixer Drive Switch	MS7
	First Mixer Drive DAC	MS6
A14J302	Revision	MS7
A15J400	IF AMP/Limiter Bias	MS6
A15J502	Third LO Tune Voltage	MS3
	3rd LO Driver Amp	MS1, MS8
A15J602	SIG ID Collector Bias	MS7
	RF Gain Control Test	MS1, MS3
A15J901	Revision	MS3
	External Mixer Switch	MS1, MS8
	Signal ID Switch	MS5, MS6
	External Mixer Bias	MS7
	RF Gain Test	MS2

Low Band Problems (1 kHz to 2.9 GHz)

1. Disconnect all inputs from the front-panel INPUT 50Ω connector.
2. Set the HP 8562 to the following settings:

   CENTER FREQ ..... 0 Hz
   SPAN ..... 1 MHz
   INPUT ATTEN ..... 0 dB

3. The LO feedthrough's amplitude observed on the display should be between −10 and −30 dBm.

Note

The marker will not PEAK SEARCH on the LO Feedthrough when in a non-zero span. To measure the LO Feedthrough amplitude with the markers, set the SPAN to 0 Hz and CENTER FREQ to 0 Hz. Press (MKR) ON.

4. If the LO feedthrough's amplitude is within limits, but signals are low, the RF path following the A8 Dual Mixer is operating properly.
5. If the LO feedthrough's amplitude is higher than −5 dBm (signal will be "clipped" at top of screen) and signals are low in amplitude, suspect a defective A8 Dual Mixer.
6. Perform the steps located in "Control Latch for Band-Switch Driver" in this chapter.
7. Check A13 Second Converter mixer diode bias at A14J19 pin 1. The bias voltage should be between −150 and −900 mV dc.
8. Troubleshoot the signal path. Refer to the power levels listed on Figure 12-3, RF Section Troubleshooting.

High Band Problems (2.75 GHz to 22 GHz)

1. Perform the steps located in "PIN Switch" in this chapter to confirm A8 Dual Mixer operation.
2. Perform the steps located in "High Band Bias" in this chapter to confirm A8 Dual Mixer operation.
3. Perform the steps located in "Control Latch for Band-Switch Driver" in this chapter.
4. Troubleshoot the signal path. Refer to the power levels listed on Figure 12-3, RF Section Troubleshooting.

Low and High Band Problems

1. On the HP 8562 press (PRESET) and **REALIGN LO & IF** . If any error messages are displayed, refer to "Error Messages" in Chapter 7.
2. Perform External Mixer Amplitude Adjustment in Chapter 2. If this adjustment cannot be completed, perform the steps located in "Third Converter" in this chapter.
3. Perform the First LO Output Amplitude performance test (Refer to the HP 8562A/B Installation manual or use TAM functional test).
4. If the performance test fails, perform the First LO Distribution Amplifier adjustment located in Chapter 2. If the adjustment fails, set the HP 8562 to the following settings:

   CENTER FREQ ..... 300 MHz
   SPAN ..... 0 Hz

5. Place the jumper on A14J23 in the TEST position. Remove W38 from the output of the A11 YTO.
6. Use a power meter or another spectrum analyzer to measure the output of A11 YTO. The power should be between +9 dBm and +13 dBm.
7. Reconnect W38 to the output of A11. Place the jumper on A14J23 in the NORM position.

8. If ERR 334 (unlevelled output) is present and the A11 YTO power output is correct, the A7 LODA drive circuit may be defective. Refer to "A7 LODA (LO Distribution Amplifier)" in this chapter.
9. Troubleshoot the signal path. Refer to the power levels listed on Figure 12-5, RF Section Troubleshooting.
10. Check Third Converter as follows:
    a. On the HP 8562, press (PRESET) and set the controls as follows:
       CENTER FREQ ..... 300 MHz
       SPAN ..... 0 Hz
    b. Inject a −28 dBm, 310.7 MHz signal into A15J801.
    c. If a flat line is displayed within 2 dB of the reference level, but the External Mixer Amplitude Adjustment fails, troubleshoot the A15 RF Assembly.

A7 LODA (LO Distribution Amplifier)

Note

YTO unlock errors may occur if the power delivered to the A15A2 Sampler is less than −9.5 dBm. Frequency response will be degraded in both internal and external mixing modes if the output power is low or unleveled.

Caution

Connecting or disconnecting the A7 LODA's bias with the HP 8562 (LINE) switch ON will destroy the A7 LODA. Always set the HP 8562 (LINE) switch OFF before removing or reinstalling W12 to either the A7 LODA or A14J10.

1. Set the HP 8562's (LINE) switch to OFF. Disconnect W12 from A14J10.
2. Connect a jumper between A14J10 pin 5 and A14J19 pin 6. Connect a jumper between A14J18 pin 13 and A14J18 pin 1.
3. Connect a DVM's positive lead to A14J18 pin 14 and the negative lead to A14J18 pin 6.
4. The voltage measured on the DVM should be more negative than −14 V dc.
5. Move the jumper from A14J18 pin 1 to A14J18 pin 2. The voltage measured on the DVM should be more positive than +14 V dc.
6. If the voltages do not meet the limits listed in steps 4 and 5, troubleshoot the A14 Frequency Control Assembly.
7. Connect the positive DVM lead to A14J10 pin 1.
8. The measured voltage should be approximately +5 V dc. If the voltage is not +5 V dc, troubleshoot the A14 Frequency Control Assembly.
9. Connect the DVM's positive lead to A14J18 pin 1. The voltage should measure within 5% of the GATE BIAS voltage listed on A7 LODA's label.
10. If this voltage is not within this range, rotate A14R628 GATE BIAS through its range while monitoring the DVM.

11. If the voltage varies between 0 V dc and −2 V dc, adjust A14R628 GATE BIAS for a DVM reading within 5% of the GATE BIAS voltage listed on A7 LODA's label. If the voltage does not vary between 0 V dc and −2 V dc, troubleshoot the A14 Frequency Control Assembly.
12. Disconnect the jumper from A14J19 to A14J10. Set the (LINE) switch OFF. Reconnect W12 to A14J10. Set the (LINE) switch ON.
13. If the DVM reading changes significantly, the A7 LODA is probably defective.

A8 Dual Band Mixer

PIN Switch

1. Connect a DVM's positive lead A14J19 pin 14 and negative lead to A14J19 pin 6.
2. Set the HP 8562's **CENTER FREQ** to 1 GHz.
3. The voltage measured by the DVM should be between +10 V dc and +13 V dc.
4. Set the HP 8562's **CENTER FREQ** to 4 GHz.
5. The voltage measured by the DVM should be between +10 V dc and +13 V dc.
6. If the measured voltages in steps 3 and 5 are within the limits, the PIN switch is operating properly. If the voltages are not within the limits, remove W15 from A14J11.
7. Set the HP 8562's **CENTER FREQ** to 1 GHz.
8. The voltage measured by the DVM should be between +14 V dc and +15 V dc.
9. Set the HP 8562's **CENTER FREQ** to 4 GHz.
10. The voltage measured by the DVM should be between +14 V dc and +15 V dc.
11. If the measured voltages in steps 8 and 10 are within the limits, the PIN switch driver is operating properly. If the voltages are not within the limits, troubleshoot the A14 Frequency Control Assembly.

High Band Bias

1. Connect a DVM's positive lead to A14J19 pin 13 and the negative lead to A14J19 pin 6.
2. Set the HP 8562's (SPAN) to 0 Hz.
3. Record the DVM reading at **CENTER FREQ** settings of 5, 10, 15, and 20 GHz (bands 1 through 4).

5 GHz (Band 1) = _____V
10 GHz (Band 2) = _____V
15 GHz (Band 3) = _____V
20 GHz (Band 4) = _____V

4. Each DVM reading recorded in step 3 should be within 50 mV of the mixer-bias voltages printed on the A8 Assembly's label. If the voltages are not within the limits, perform the Dual Band Mixer Bias Adjustment in Chapter 2. If the voltages are within limits, continue with step 5.
5. Set the A2 assembly's WR PROT/WR ENA jumper to the WR ENA position.
6. Set the HP 8562 to the following settings:

   CENTER FREQ ..... 5 GHz
   SPAN ..... 10 MHz
   Log scale ..... 2 dB/div

7. On the HP 8562 press (INT) and MIXER BIAS. The MIXER BIAS DAC value should be displayed in the active function block.
8. Apply a 5 GHz, 0 dBm signal to the INPUT 50 Ω.
9. Note the MIXER BIAS DAC value; this will have to be reset later.

   MIXER BIAS DAC value = _____

10. Observe the voltage indicated on the DVM while stepping the DAC through its 0 to 255 range. The voltage should increase as the DAC is stepped from 0 to 255.
11. The displayed signal should exhibit a peak (sometimes two peaks) as the DAC is stepped through its range.
12. If the bias voltage does not vary, disconnect W15 from A14J11 and continue with step 13.
13. Step the DAC through its 0 to 255 range. If the bias voltage does not vary, the A14 Frequency Control Assembly is probably defective. If the bias voltage varies from approximately 0 V dc to +10 V dc, the A8 Dual Band Mixer is probably defective.
14. Reset the DAC to the value noted in step 9.
15. Reconnect W15 to A14J11 and place the WR PROT/WR ENA jumper in the WR PROT position.

A9 Input Attenuator

1. Perform the Input Attenuator Accuracy test in Chapter 3 of the Installation Manual.
2. If there is a step-to-step error of approximately 10 dB or more, continue with step 3.
3. On the HP 8562 press (AMPLITUDE), and ATTEN.
4. Step the RF ATTEN from 0 dB to 70 dB. A "click" should be heard at each step. The absence of a click indicates faulty attenuator drive circuitry.
5. Monitor the pins of A14U420 with a logic probe or DVM while setting ATTEN to the values listed in Table 12-3.
6. If one or more logic levels listed in Table 12-3 is incorrect, disconnect W11 from A14J6 and repeat step 4 checking only pins 3, 5, 11, and 13 of A14U420. Pins 4, 6, 10, and 12 should all read low TTL levels.

7. If one or more logic levels listed in Table 12-3 is incorrect with W11 disconnected, troubleshoot the A14 Frequency Control Assembly.
8. If all logic levels are correct, the A9 Input Attenuator is probably defective.

Table 12-3. Attenautor Pin Values

	A14U420 Pin Number							
ATTEN Setting (dB)	3	4	5	6	10	11	12	13
0	high	low	high	low	low	high	low	high
10	high	low	high	low	low	high	high	low
20	high	low	low	high	low	high	low	high
30	high	low	low	high	low	high	high	low
40	high	low	low	high	high	low	low	high
50	high	low	low	high	high	low	high	low
60	low	high	low	high	high	low	low	high
70	low	high	low	high	high	low	high	low

A12 RF Switch

The A12 RF Switch is a latching switch; current flows only during the switching period.

1. Set the HP 8562 to the following settings:

   CENTER FREQ ..... 300 MHz
   SPAN ..... 0 Hz

2. Set the CENTER FREQ to 3 GHz. An audible click should be heard.
3. Set the CENTER FREQ to 300 MHz. An audible click should be heard.
4. If clicks are heard in both steps 2 and 3, the Band Switch Driver on the A14 Frequency Control Assembly is operating properly.
5. Connect a DVM to A14J16 pin 15.
6. Switch the analyzer between high and low bands (center frequency 300 MHz and 3 GHz). The DVM should measure approximately +5.6 V dc at each setting.
   a. If no click or buzzing sound was heard, and the voltage in one setting was >+5.6 V dc, the fault is probably on A14. If the voltage in one setting was <+5.6 V dc, the fault is probably on A12.
   b. If a buzzing sound was heard, and the voltage at the setting where the switch buzzes is <+5.6 V dc, the fault probably is on A14. If the voltage in the buzzing state is >+5.6 V dc, the fault is probably on A12.
7. Disconnect W14 from A14J8.

8. Switch the analyzer between high band and low band (center frequency 300 MHz and 3 GHz). The DVM should measure approximately 0.2 V dc.
9. If the voltage measures approximately 0.2 V dc, the A12 RF Switch is probably defective.
10. Reconnect W14 to A14J18. Remove W44 (cable from the A12 RF Switch to FL1 Low Band Low Pass Filter).
11. Connect another spectrum analyzer to J2 of the A12 RF Switch and set the analyzer's center frequency to 300 MHz.
12. Connect the HP 8562's CAL OUTPUT to the INPUT 50 Ω. Set the HP 8562 to the following settings:

    CENTER FREQ ..... 300 MHz
    INPUT ATTEN ..... 0 dB

13. The signal amplitude should measure −10 dBm ±2 dB.
14. Set the HP 8562 CENTER FREQ to 3 GHz. The signal displayed on the other spectrum analyzer should disappear.
15. On HP 8562A instruments, remove W46 cable from A12 RF Switch to the A10 YTF. On HP 8562B instruments, remove W46 from A12 RF Switch to AT1.
16. Connect another spectrum analyzer to J1 of the A12 RF Switch.
17. Set the HP 8562 to the following settings:

    CENTER FREQ ..... 3 GHz
    INPUT ATTEN ..... 0 dB

18. Set the other spectrum analyzer's center frequency to 300 MHz. The signal amplitude should measure −10 dBm ±2 dB.
19. Set the HP 8562's CENTER FREQ to 300 MHz. The signal displayed on the other spectrum analyzer should disappear.
20. Reconnect W44 and W46.

A13 Second Converter

Caution The A13 assembly is extremely sensitive to Electrostatic Discharge (ESD). For further information regarding electrostatic cautions, refer to "Electrostatic Discharge Information" in Chapter 1.

1. Connect the HP 8562 CAL OUTPUT to INPUT 50 Ω.
2. Set the HP 8562 to the following settings:

    CENTER FREQ ..... 300 MHz
    SPAN ..... 0 Hz
    ATTEN ..... 0 dB

3. Disconnect W35 from A13J2.
4. Connect a test cable from A13J2 to the input of another spectrum analyzer.

5. Tune the other spectrum analyzer to 310.7 MHz. The signal displayed on the other spectrum analyzer should be approximately −28 dBm.

6. Remove the test cable from A13J2 and reconnect W35 to A13J2.

7. Disconnect W33 from A13J4 and connect W33 through a test cable to the input of another spectrum analyzer.

8. Tune the other spectrum analyzer to a center frequency of 600 MHz.

9. If a 600 MHz signal is not present, or its amplitude is less than −5 dBm, the fault is probably on the A15 RF Assembly.

10. Connect a DVM's positive lead to A14J19 pin 15 and the negative lead to A14J19 pin 6.

11. If the DVM does not measure between +14.0 V dc and +15.0 V dc perform the following:

    a. Set the HP 8562's (LINE) switch OFF and disconnect W13 from A14J1.
    b. Set the HP 8562's (LINE) switch ON and set the analyzer to the following settings:
       CENTER FREQ ..... 300 MHz
       SPAN ..... 10 MHz
    c. The voltage should measure +15 V dc ±0.2 V. If the voltage measures outside this limit, the A14 Frequency Control Assembly is probably defective.
    d. Set the HP 8562's (LINE) switch OFF, reconnect W13 to A14J12, and set the (LINE) switch ON. Set the HP 8562 to the following settings:
       CENTER FREQ ..... 300 MHz
       SPAN ..... 0 Hz

12. Move the DVM's positive lead to A14J19 pin 1. The voltage should measure between −150 mV dc and −900 mV dc. If the voltage measures outside this limit, measure and record the voltages on the pins listed below:

    eliminate for DISC
    (OK for Fuse DISC)

    a. A14J18 pin 2 = _____ V
    b. A14J19 pin 2 = 7.23 V
    c. A14J19 pin 3 = 3.39 V
    d. A14J19 pin 4 = 8.1 V
    e. A14J19 pin 5 = 14 V
    f. A14J19 pin 15 = 14 V

13. If the voltage differences in step 12 are not within the limits listed below, the A13 Second Converter is probably defective.

    a. The reading in step 12a should be 1.5 V to 2.3 V more positive than 12d.
    b. The reading in step 12f should be 70 mV to 110 mV more positive than 12e.
    c. The reading in step 12b should be 150 mv to 200 mv more positive than 12c.

14. Connect the DVM's positive lead to A14J19 pin 15.

15. Set the HP 8562's CENTER FREQ to 3 GHz.

16. The DVM should measure between −2.0 V dc and −3.5 V dc. If the voltage measures outside this limit, perform the following steps:

    a. Set the HP 8562's (LINE) switch OFF, disconnect W13 from A14J12, and set the (LINE) switch ON.
    b. Wait for the power-on sequence to finish and then set the HP 8562 to the following settings:

CENTER FREQ ..... 3 GHz
SPAN ..... 0 Hz

c. If the DVM measures −15 V dc ±0.2 V, the A13 Second Converter is probably defective. If the DVM measures outside this limit, the A14 Frequency Control Assembly is probably defective.

17. Set the (LINE) switch OFF and reconnect W13 to A14J12.

A14 Frequency Control Assembly

Note The block diagrams for the A14 and A15 assemblies are located in Chapter 11, Synthesizer Section.

A7 LODA Drive

See Function Block Z of A14 Frequency Control Schematic Diagram (Sheet 3 of 5).

1. Set the HP 8562 to the following settings:

   CENTER FREQ ..... 300 MHz
   SPAN ..... 2 MHz
   TRIGGER ..... SINGLE

2. Measure the signal power at the output of A7 (see item (1) of Figure 12-2).
3. If the output power is low, A14U424A's output voltage, item (2), (A14J18 pin 14) should be above 0 V. If the output power is high, the voltage should be more negative than −10 V. If the voltages do not measure as indicated, check that the voltages at A14J18 pins 5 and 13, item (4), are consistent with the operational amplifier's output.

Note If a TAM is available, use Manual Probe Troubleshooting to make measurements on A14J18 pins 5, 13, and 14. These voltages are referred to as AMP CNTL, LO SENSE, and PIN ATTEN respectively.

4. If the voltages measure as indicated in step 3, measure the A11 YTO output. (See item (3) of Figure 12-2.)
5. If all measurements are within limits, refer to "A7 LODA (LO Distribution Amplifier)" in this chapter.

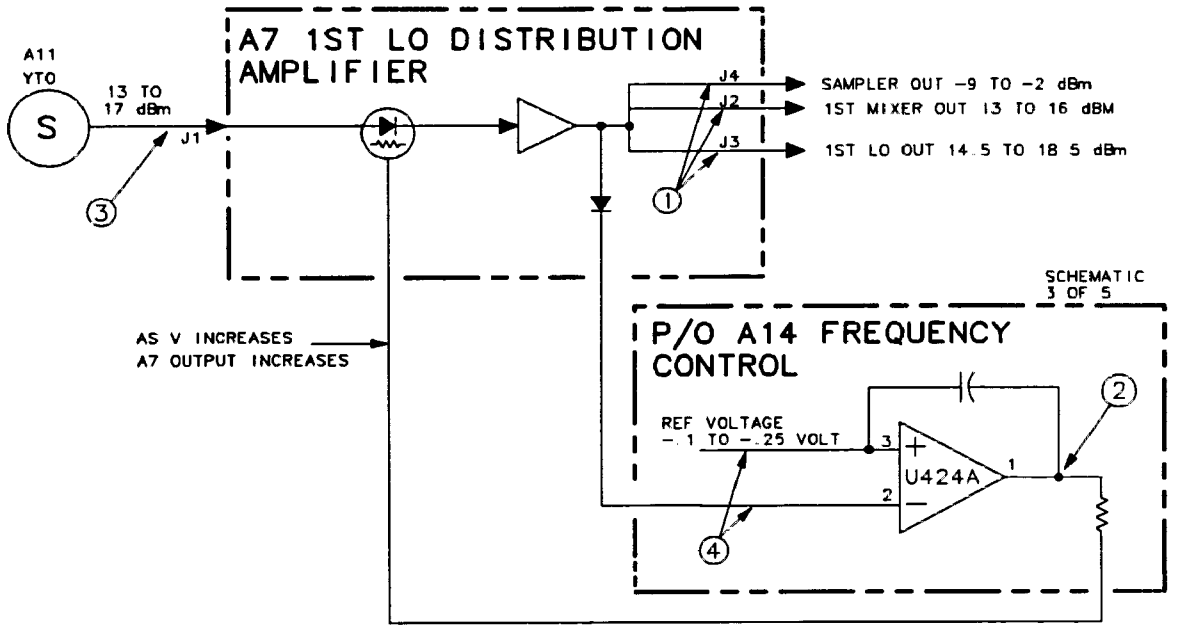

Figure 12-2. A7 LODA Drive

Control Latch for Band-Switch Driver

See Function Block P of A14 Frequency Control Schematic Diagram (Sheet 3 of 5).

1. Connect a DVM's positive lead to A14U417 pin 5 and the negative lead to A14J18 pin 6.
2. Set the HP 8562 to the following settings:

   CENTER FREQ ..... 300 MHz
   SPAN ..... 0 Hz

3. The voltage should measure approximately 0 V dc (TTL low).
4. Set the HP 8562's CENTER FREQ to 3 GHz.
5. The voltage should measure approximately +5 V dc (TTL high).

YTF Driver Circuit

The YTF driver circuitry consists of the Sweep + Tune Multiplier, FAV (Frequency Analog Voltage) Generator, YTF Gain and Offset, and YTF Drive. Refer to A14 Frequency Control Schematic (sheet 3 of 5). The FAV Generator generates the 0.5 V/GHz signal. The YTF driver circuitry can be half-split by checking the rear-panel's 0.5 V/GHz output.

The Sweep + Tune Multiplier takes tune information (YTO start frequency) and sweep (based on LO span) and multiplies it so that it is correct for the appropriate YTF band.

The FAV Generator's sample-and-hold switch, U415B, and C31 hold the YTF steady during retraces between multiband sweeps. Switch U415C and R94 provide the YTF dehysteresis pulse. In high band, amplifier U402A provides an offset voltage to account for the 310.7 MHz offset (U415A open) between the desired harmonic of the YTO frequency and the center frequency. In low band, switch U415A is closed to account for the 3.9107 GHz 1st IF offset

between the YTO frequency and the center frequency. This signal is 0.5 V/GHz of tuned frequency and is available at the rear panel.

Note

Early firmware revisions activate a dehysteresis pulse at the end of any sweep or band. Firmware revisions of 870728 and later activate a dehysteresis pulse only at the end of spans greater than 1 MHz at the end of the trace. Thus, a multiband sweep has only one dehysteresis pulse.

1. On the HP 8562, press (PRESET), and set controls to the following settings:

   START FREQ ..... 2.75 GHz
   STOP FREQ ..... 2.2 ~~GHz~~ 2.2 GHz

2. On the HP 8562, press (SWEEP), **REAR PNL OUTPUT**, and **.5 V/GHz (FAV)**.

3. Monitor the rear-panel LO SWP | 0.5 V/GHz OUTPUT with an oscilloscope. The waveform should resemble Figure ~~11-15~~. 12-3

4. Set the HP 8562 to the following settings:

   START FREQ ..... 8 GHz
   STOP FREQ ..... 10 GHz

5. Monitor A14J15 pin 1 with an oscilloscope. There should be a +1.2 V to +2.66 V ramp as illustrated in Figure ~~11-16~~. 12-4

6. If the ramp is not correct, confirm the operation of the Main Coil Tune DAC and Sweep Generator. Refer to "Unlocked YTO PLL" steps 37 through 41 and "Sweep Generator Circuit."

7. Set the HP 8562 to the following settings:

   CENTER FREQ ..... 5 GHz
   SPAN ..... 0 Hz

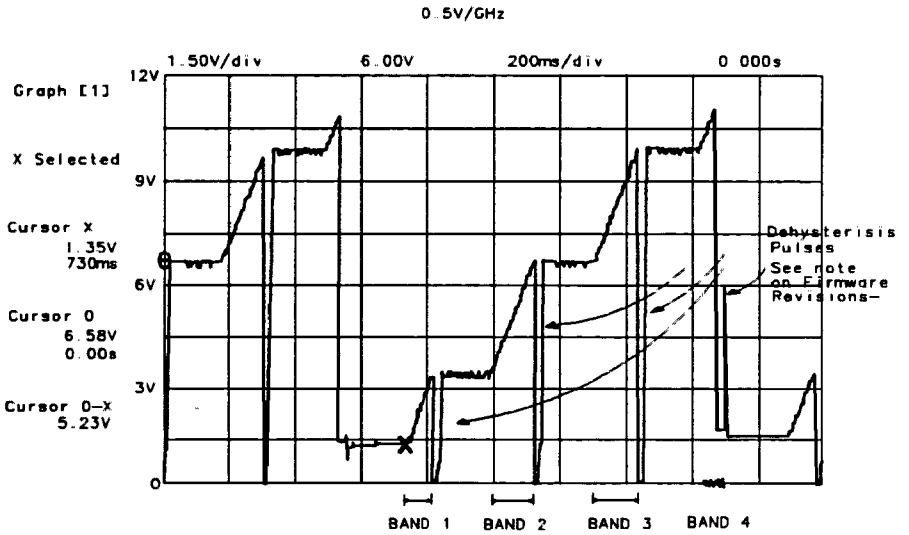

Figure 12-3. Rear-Panel SWP Output

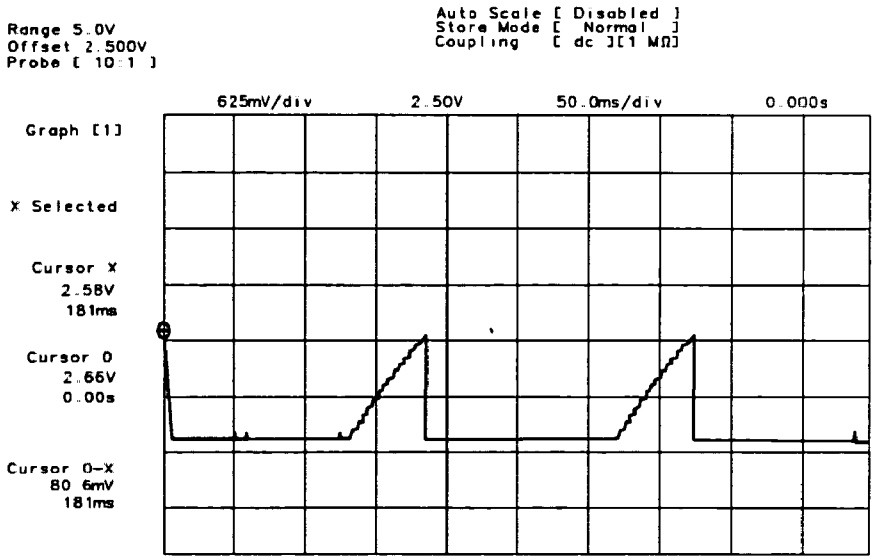

Figure 12-4. Signal at A14J15 Pin 1

8. Monitor A14J15 pin 3 with a DVM. For a center frequency of 5 GHz, the voltage should measure −1.33 V dc ±0.2 V dc. Use the following formula to calculate the voltage:

$$V_{(J15\ pin\ 3)} = \frac{-0.25\ V}{GHz}\ (\text{freq. in GHz}) - 0.078\ V$$

9. Check the voltage at A14J16 pin 3 with the HP 8562 set to the center frequency settings listed in Table 12-15. The table also lists the settings for the three switches, U416 in Function Block Q, and the gain through the Sweep + Tune Multiplier.

Table 12-4. Sweep + Tune Multiplier Values

Center Frequency	A14J15 Pin 3 (V dc)	U416A	U416B	U416C	Gain
5 GHz	−1.33	Open	Closed	Closed	×1
10 GHz	−2.5	Open	Closed	Open	×2
15 GHz	−3.82	Closed	Open	Open	×3
20 GHz	−5.07	Open	Open	Open	×4

10. Move the WR PROT/WR ENA jumper on the A2 Controller Assembly to the WR ENA position.

11. Set the HP 8562 to the following settings:

    CENTER FREQ ..... 5 GHz
    SPAN ..... 0 Hz

12. On the HP 8562, press Mixer (INT), PRESEL ADJ, and PRESEL OFFSET.

13. Connect a DVM to A14J16 pin 13.

14. Set the DAC to values from 0 to 255 to yield DVM readings from 0 V to −10 V, respectively.
15. Move the jumper on A14J14 from the NORM to the OPT position.
16. Connect the DVM to A14J16 pin 1.
17. Press **PRESEL SLOPE**.
18. Set the DAC to values from 0 to 255 to yield DVM readings from 0 V to −10 V, respectively.
19. Move the jumper on A14J14 from the OPT to the NORM position.
20. On the HP 8562, press (PRESET) and **REALIGN LO & IF**.
21. Connect the DVM to A14J16 pin 3.
22. Change the **CENTER FREQ** in 1 GHz steps and confirm that the voltage changes by 266 mV/GHz.
23. Move the WR PROT/WR ENA jumper on the A2 Controller Assembly to the WR PROT position.

A15 RF Assembly

Note The block diagrams for the A14 and A15 assemblies are located in Chapter 11, Synthesizer Section.

Confirming a Faulty Third Converter

1. Perform the IF Input Amplitude Accuracy performance test in the HP 8562A/B Installation Manual. This exercises most of the third converter.
2. If the performance test fails, perform the External Mixer Amplitude adjustment in Chapter 2 of this manual.
3. If adjustment cannot be made, disconnect W35 from A15J801.
4. On the HP 8562 press (PRESET) and set the controls to the following settings:

   CENTER FREQ ..... 300 MHz
   SPAN ..... 0 Hz

5. Connect a signal generator to A15J801.
6. Set the signal generator to the following settings:

   Frequency ..... 310.7 MHz CW
   Power ..... −28 dBm

7. If a flat line is displayed within 2 dB of the reference level and the performance test passed, troubleshoot microcircuits A7 through A13.

8. If a flat line is displayed within 2 dB of the reference level and the performance test failed, troubleshoot the A15 RF Assembly.

Confirming Third Converter Output

1. Connect the HP 8562's CAL OUTPUT to INPUT 50 Ω.
2. Set the HP 8562 to the following settings:

   CENTER FREQ ..... 300 MHz
   SPAN ..... 0 Hz
   ATTEN ..... 0 dB

3. Disconnect W29 from A15J601.
4. Connect a test cable from A15J601 to the input of another spectrum analyzer.
5. Tune the other spectrum analyzer to 10.7 MHz. The signal displayed on the other spectrum analyzer should be approximately −5 dBm.
6. Remove the test cable from A15J601 and reconnect W29 to A15J601.

Third Converter

See Function Blocks A, B, C, D, and E of A15 RF Schematic Diagram (Sheet 2 of 4).

The 3rd Converter consists of the 2nd IF Distribution, A15A1 2nd IF Amplifier, Double Balanced Mixer, 10.7 MHz Bandpass Filter, and Flatness Compensation Amplifiers. The 2nd IF Distribution switches between two possible 2nd IF inputs: the internally generated 2nd IF, or the external mixing IF INPUT. A variable dc bias can be applied to the IF INPUT for external mixers which require such bias. The selected input is fed to the A15A1 2nd IF Amplifier. This is a microcircuit consisting of two stages of gain and two stages of SAW filters for image frequency rejection.

The 2nd IF Amplifier's factory-selected attenuator is chosen to achieve a gain from A15J801 or A15J802 to A15TP601 of 12 dB ±2 dB.

The Flatness Compensation Amplifier consists of three fixed-gain stages and two stages of variable attenuation. This provides an overall adjustable gain of 8 dB to 32 dB. This gain is adjusted during an analyzer sweep to compensate for front-end conversion-loss versus frequency. Perform the following steps to test the amplifier's gain:

The 10.7 MHz Bandpass Filter provides a broadband termination to the mixer while filtering out unwanted mixer products.

1. Set the HP 8562 to INT mixer mode.
2. In the 2nd IF Distribution (Function Block A), diode CR802 should be forward biased and diode CR801 should be reverse biased.
3. Connect a signal source to A15J801 and set the source to the following settings:

   Frequency ..... 310.7 MHz
   Amplitude ..... −30 dBm

4. Use an active probe with another spectrum analyzer to measure the signal at A15TP601. The signal should measure −18 dBm ±2 dB confirming the operation of the 2nd IF Amplifier.

5. Use an active probe with another spectrum analyzer to measure the 300 MHz into the mixer's LO port (A15TP602). The signal should measure at least +7 dBm.
6. Measure the power of the mixer's 10.7 MHz IF output (A15TP603). The signal level should be approximately −24 dBm.
7. Move the A2 Controller Assembly's WR PROT/WR ENA jumper to the WR ENA position.
8. While measuring the signal at TP603, adjust the signal source until the level of the 10.7 MHz IF is −40 dBm.
9. Set the HP 8562 to **SINGLE** mode.
10. On the HP 8562 press (INT) and **FLATNESS**. Increase the gain of the Flatness Compensation Amplifiers to maximum by entering #255 using the data keys. This sets the attenuators in the Flatness Compensation Amplifiers to their minimum values.
11. Connect the other spectrum analyzer to A15J601 and measure the 10.7 MHz IF signal level. The signal should measure approximately −10 dBm. If the signal level is incorrect, continue with step ~~12~~ 13
12. Enter #0 into the HP 8562 Flatness Data. The signal level at A15J601 should measure less than −32 dBm. This sets the gain of Flatness Compensation Amplifiers to a minimum (attenuators to maximum attenuation). If the signal level is incorrect, continue with step 12.
13. Check that the gain stages are properly biased and functioning.
14. Check the attenuator stages and Flatness Compensation Control circuitry.
    a. For maximum gain (Flatness Data equals 255), RF GAIN (A15J901 pin 2) should be at +4 V dc and the current through each attenuator section as measured across R606 or R614 should be about 7 mA.
    b. For minimum gain (Flatness Data equals 0), RF GAIN (A15J901 pin 2) should be at 0 V dc and the current through each attenuator section should be close to 0 mA.

Caution As long as the flatness data just entered is not stored, the previously-stored flatness data will be present after the power is cycled.

15. Move the A2 Controller Assembly's WR PROT/WR ENA jumper to the WR PROT position.

Flatness Compensation Control

See Function Block G of A15 RF Schematic Diagram (Sheet 2 of 4).

The Flatness Compensation Control consists of a buffer amp (U901B) and two identical voltage-to-current converters (U901A and U901C). The thermistor RT901 in the buffer amp provides temperature compensation for the PIN diodes in the attenuator stages. The gain of the Flatness Compensation Amplifiers is driven to a minimum by the REDIR line going low during Automatic IF Adjustment.

Control Latches

See Function Block H of A15 RF Schematic Diagram (Sheet 2 of 4).

The control latches control the PIN Switch Drivers illustrated in Function Block I.

1. Connect a DVM's positive lead to A15J901 pin 15 (HXMX). Connect the negative lead to A15J901 pin 6. The measured signal controls the switching between internal and external IF signals.
2. On the HP 8562 press (EXT). The voltage on the DVM should measure approximately +5 V dc (TTL high).
3. On the HP 8562 press (INT). The voltage on the DVM should measure approximately 0 V dc (TTL low).
4. Connect the DVM's positive lead to A15J901 pin 13 (LSID). The signal measured turns on the SIG ID oscillator.
5. On the HP 8562 press (INT), SIG ID ON, (TRIG), and SINGLE.
6. Subsequent pushes of the SINGLE softkey should cause the signal measured on the DVM to toggle between TTL high and low levels.
7. Connect an oscilloscope probe to A15U902 pin 7 (REDIR) and the probe ground lead to A15J901 pin 6. The signal measured controls the flatness compensation circuit.
8. On the HP 8562 press (PRESET) and set the (SPAN) to 1 MHz.
9. Set the oscilloscope for the following settings:

   Amplitude Scale ..... 2 V/div
   Sweep Time ..... 20 ms/div

10. The waveform should be at a TTL high during part of the retrace period and a TTL low during the sweep (about 50 ms).

SIG ID Oscillator

See Function Block F of A15 RF Schematic Diagram (Sheet 2 of 4).

The SIG ID Oscillator provides a shifted third LO (approximately 298 MHz) to distinguish true signals from false signals (such as image or multiple responses). When the HP 8562 is set to SIG ID ON, the SIG ID Oscillator turns on during alternate sweeps.

1. Set the HP 8562 to the following settings:

   TRIGGER ..... Single
   SIG ID ..... On

2. Use an active probe with another spectrum analyzer to measure the signal level at A15TP602.
3. On the HP 8562 press SINGLE. With each press of SINGLE, the analyzer alternates between the following two states:

   State 1:
   A15J901 pin 13 (LSID) ..... TTL low
   SIG ID Oscillator ..... On
   Signal at A15TP602 ..... 298 MHz ±50 kHz (at least +1 dBm)

State 2:

A15J901 pin 13 (LSID) ..... TTL high
SIG ID Oscillator ..... Off
3rd LO Driver Amplifier..... Provides LO for Double Balanced Mixer

4. With the SIG ID Oscillator on, measure the frequency at A15TP602 with a frequency counter and an active probe. If the frequency is not 298 MHz ±50 kHz, refer to the SIG ID Oscillator Adjustment procedure.

5. On the HP 8562 press **SINGLE** until A15J901 pin 13 is at TTL low. Diodes CR603 and CR605 should be forward biased and CR604 should be reverse biased (approximately 6 V dc reverse bias). Diodes CR501 and CR502 should be forward-biased, disabling the 3rd LO Driver Amplifier.

6. The voltage at the R622/R623 node should measure approximately −5 V dc, biasing Q604 on.

7. If oscillator bias voltages are correct, place a 100 Ω resistor across SAWR U602 pins 1 and 2. If the SAWR has failed while open, this will provide the equivalent loss of a correctly functioning SAWR.

10 MHz Reference

The HP 8562 10 MHz reference consists of 10 MHz TCXO with associated TTL level generator and distribution amplifier. The TCXO and TTL level generator are turned off when using an external 10 MHz reference. Also, with the analyzer set to EXTernal frequency reference, line receiver U304B is disabled and U304A is on. In INTernal frequency reference, U304A is disabled and U304B is turned on.

1. Set the HP 8562's 10 MHz reference to **INT**.

2. Use a spectrum analyzer to confirm the presence of a 10 MHz signal at the following test points:

   A15J303 ..... ≥−10 dBm
   A15J304 ..... ≥−10 dBm
   A15J301 ..... ≥−2 dBm

3. Check for a 3 V p-p waveform at A15J302 using an oscilloscope (see Figure 12-5).

4. Check that the signal at A15J301 is 10 MHz ±40 Hz using a frequency counter. If necessary, adjust R306 to bring the 10 MHz signal into specification.

5. If there is no problem with INTernal 10 MHz reference operation, check EXTernal 10 MHz reference operation follows:

6. Set the HP 8562's 10 MHz reference to **EXT**.

7. Connect a 10 MHz, −2 dBm, signal to the rear-panel 10 MHz REF IN/OUT connector.

8. Check the signals at A15J301, A15J302, A15J303, and A15J304 according to the procedure in steps 2 through 4.

9. If the signals are correct in EXTernal operation, but not in INTernal operation, the problem lies in the TCXO, its voltage reference, or the TTL level generator. Check these sections as follows:

   a. Set the HP 8562's 10 MHz reference to **INT**.

Not updated for newer TCXO

b. ~~Check TP303 for approximately~~ +12 V dc.

c. Check for a 10 MHz sine wave, ≥1 V p-p, at U302 pin 2 using an oscilloscope.

10. Check for a 10 MHz TTL signal at ~~U301~~ U303 pin ~~9~~ 5 using an oscilloscope. (See Figure 12-6).

11. If the signal at U301 pin 9 is correct, but there is a problem with the signals at A15J301, A15J302, A15J303, or A15J304, suspect U303, U304, or U306 in the 10 MHz Distribution Amplifier.

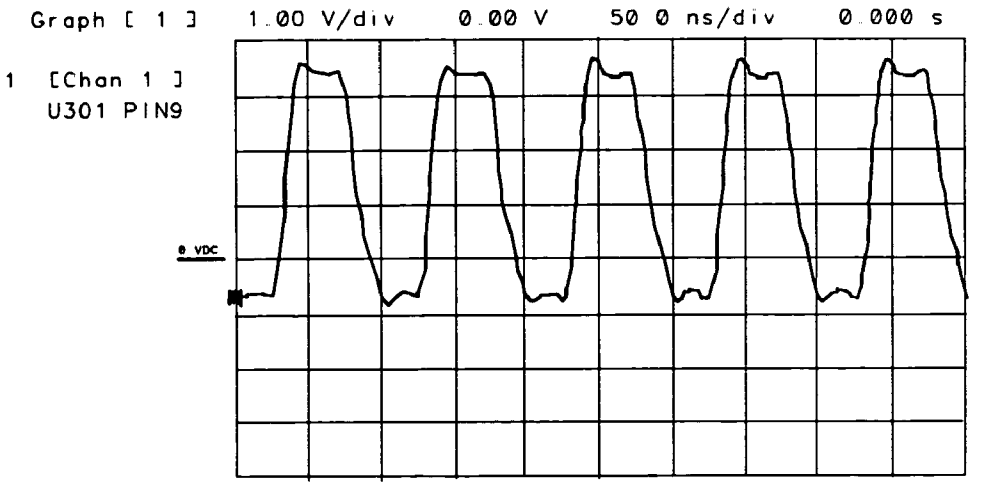

Figure 12-5. 10 MHz Reference at A15J302

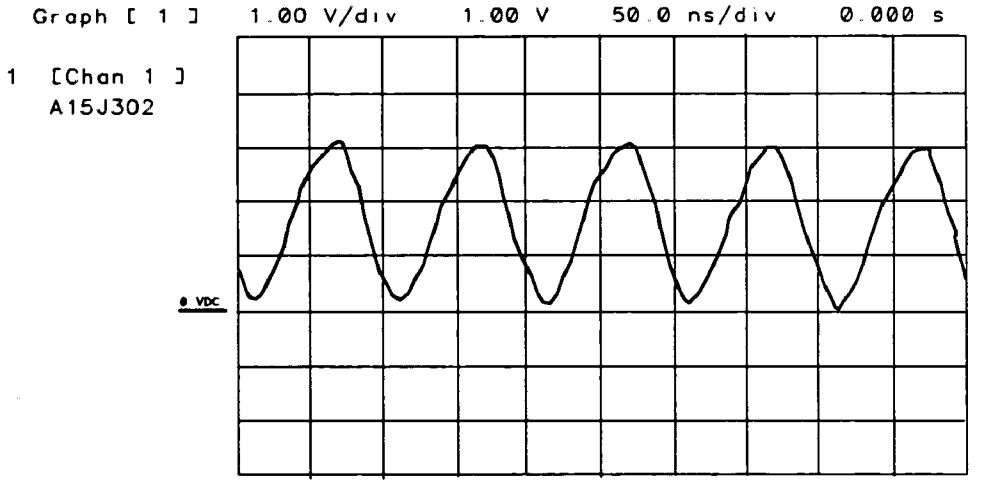

Figure 12-6. 10 MHz TTL Reference at U301 Pin 9

NOTES

1. POWER LEVELS ARE MEASURED WITH A 0dBm INPUT SIGNAL AT INPUT 50Ω WITH INPUT ATTENUATOR SET AT 10dB.

MNEMONIC TABLE

MNEMONIC	DESCRIPTION
TUNE+,TUNE-	YTF TUNE SIGNAL
HTR+,HTR-	YTF HEATER POWER
MAIN COIL+,MAIN COIL-	YTO MAIN COIL TUNE SIGNAL
FM+,FM-	YTO FM COIL TUNE SIGNAL
LO SENSE	LO AMPLITUDE SENSE VOLTAGE
LEVEL ADJUST	LO AMPLITUDE ADJUSTMENT VOLTAGE (PIN ATTEN)
GATE BIAS	LODA GATE BIAS VOLTAGE
XMX	EXTERNAL MIXER; +12V= EXT. MIX; -12V=INT MIX
SID	SIG ID OSCILLATOR ON. +12V=SIG ID OFF; -8V= SIG ID ON
PIN SW	PIN DIODE SWITCH CONTROL FOR DUAL MIXER LO SIGNAL
MIXER BIAS	BIAS SIGNAL FOR DUAL MIXER
PIN DIODE SWITCH	PIN DIODE SWITCH CONTROL FOR 2ND CONV. IF OUTPUT.
MIXER BIAS	DETECTED VOLTAGE ON 2ND CONVERTER MIXER DIODE
RFGAIN	VOLTAGE TO CONTROL GAIN OF FLATNESS COMP. AMPS
RFGAIN1 & RFGAIN2	CURRENTS TO DRIVE PIN DIODES IN FLATNESS COMP AMPS
L10dBA,L20dBB,L20dBC,L20dBD	CONTROL LINES TO SET ATTENUATOR SECTIONS A,B,C, AND D TO ATTENUATE POSITION (ACTIVE LOW)
10dBA,20dBB,20dBC,20dBD	CONTROL LINES TO SET ATTENUATOR SECTIONS A,B,C, AND D TO ATTENUATE POSITION (ACTIVE HIGH)

Figure 12-7. RF Section, Troubleshooting Block Diagram (1 of 2)

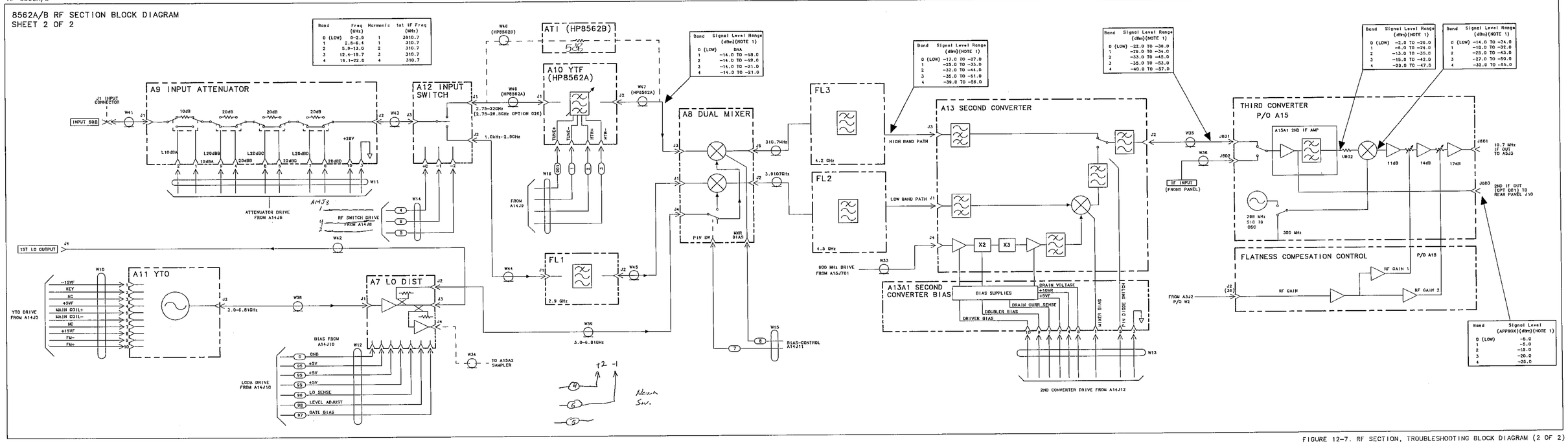

Band	Freq (GHz)	Harmonic	1st IF Freq (MHz)
0 (LOW)	0-2.9	1	3910.7
1	2.8-6.4	1	310.7
2	5.9-13.0	2	310.7
3	12.4-19.7	3	310.7
4	18.1-22.0	4	310.7

Band	Signal Level Range (dBm)(NOTE 1)
0 (LOW)	DNA
1	-14.0 TO -18.0
2	-14.0 TO -19.0
3	-14.0 TO -21.0
4	-14.0 TO -21.0

Band	Signal Level Range (dBm)(NOTE 1)
0 (LOW)	-17.0 TO -27.0
1	-25.0 TO -33.0
2	-32.0 TO -44.0
3	-35.0 TO -51.0
4	-39.0 TO -56.0

Band	Signal Level Range (dBm)(NOTE 1)
0 (LOW)	-22.0 TO -36.0
1	-26.0 TO -34.0
2	-33.0 TO -45.0
3	-35.0 TO -53.0
4	-40.0 TO -57.0

Band	Signal Level Range (dBm)(NOTE 1)
0 (LOW)	-2.0 TO -26.0
1	-6.0 TO -24.0
2	-13.0 TO -35.0
3	-15.0 TO -42.0
4	-20.0 TO -47.0

Band	Signal Level Range (dBm)(NOTE 1)
0 (LOW)	-14.0 TO -34.0
1	-18.0 TO -32.0
2	-25.0 TO -43.0
3	-27.0 TO -50.0
4	-32.0 TO -55.0

Band	Signal Level (APPROX)(dBm)(NOTE 1)
0 (LOW)	-5.0
1	-5.0
2	-15.0
3	-20.0
4	-25.0

FIGURE 12-7. RF SECTION, TROUBLESHOOTING BLOCK DIAGRAM (2 OF 2)

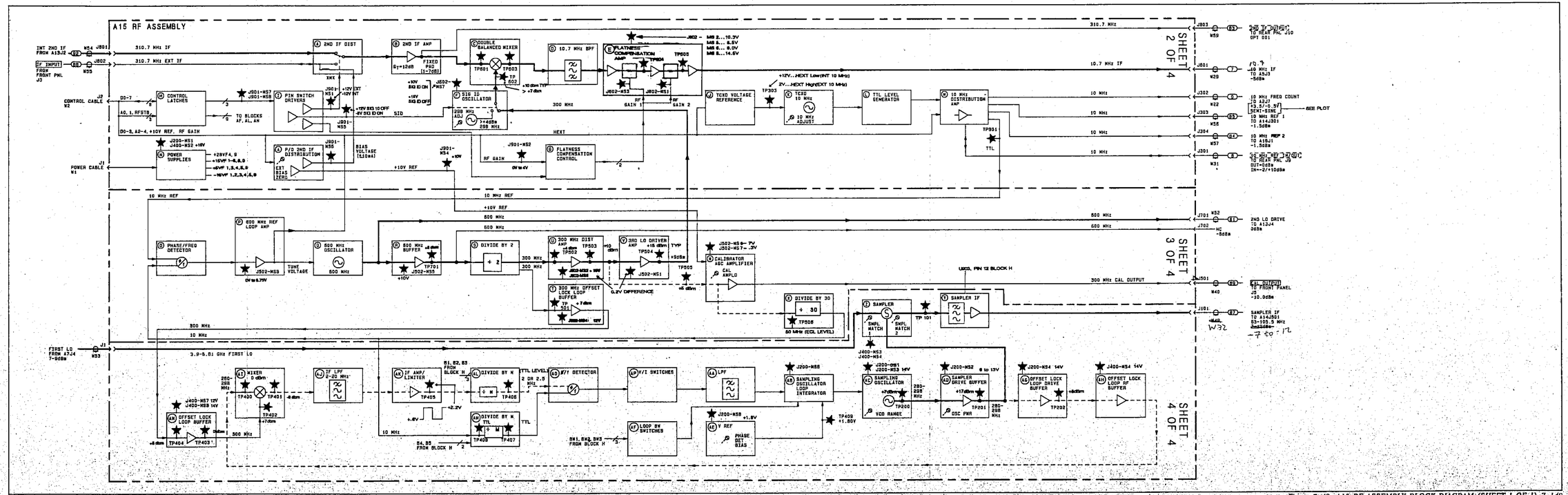

Figure 7-49. A15 RF ASSEMBLY BLOCK DIAGRAM (SHEET 1 OF 1) 7-149

13

Display/Power Supply Section

The Display/Power Supply Section contains the A6 Power Supply, A6A1 HV Module, A17 CRT Driver, and A18 CRT. Figure 13-1 illustrates the section block diagram. Table 13-1 lists signal versus pin numbers for Power Cable W1. For schematics, component-locations, and replaceable parts lists for this board, see the *HP 8562A/B Component-Level Information* manual.

	Page
Troubleshooting Using the TAM	13-4
Blank Display	13-5
Blank Display	13-6
Display Distortion	13-7
Focus Problems	13-8
Intensity Problems	13-9
A6 Power Supply Assembly	13-11
Dead Power Supply	13-11
Line Fuse Blowing	13-13
Supply Restarting Every 1.5 Seconds (Kick Start)	13-13
Low Voltage Supplies	13-13
High Voltage Supplies	13-14
CRT Supply Dropping Out	13-15
Blanking Signal	13-15
Buck Regulator Control	13-16
DC-DC Converter Control	13-16
Power Up	13-16

Warning **The A6 power supply and A6A1 High Voltage Assemblies contain lethal voltages with lethal currents in all areas. Use extreme care when servicing these assemblies. Always disconnect the power cord from the instrument before servicing these assemblies. Failure to follow this precaution can represent a shock hazard which may result in personal injury.**

Warning **The voltage potential at A6A1W3 is +9 kV. If the cable must be disconnected, remove the instrument's power cord first. Always disconnect at the CRT with caution! Failure to discharge A6A1W3 may result in severe electrical shock to personnel and damage to the instrument.**

Warning **Always use an isolation transformer when troubleshooting either the A6 Power Supply or the A6A1 HV Module. When using an isolation transformer, connect a jumper between A6TP101 and A6TP301. This connects the circuit common to earth ground. Remove this jumper when the isolation transformer is not used.**

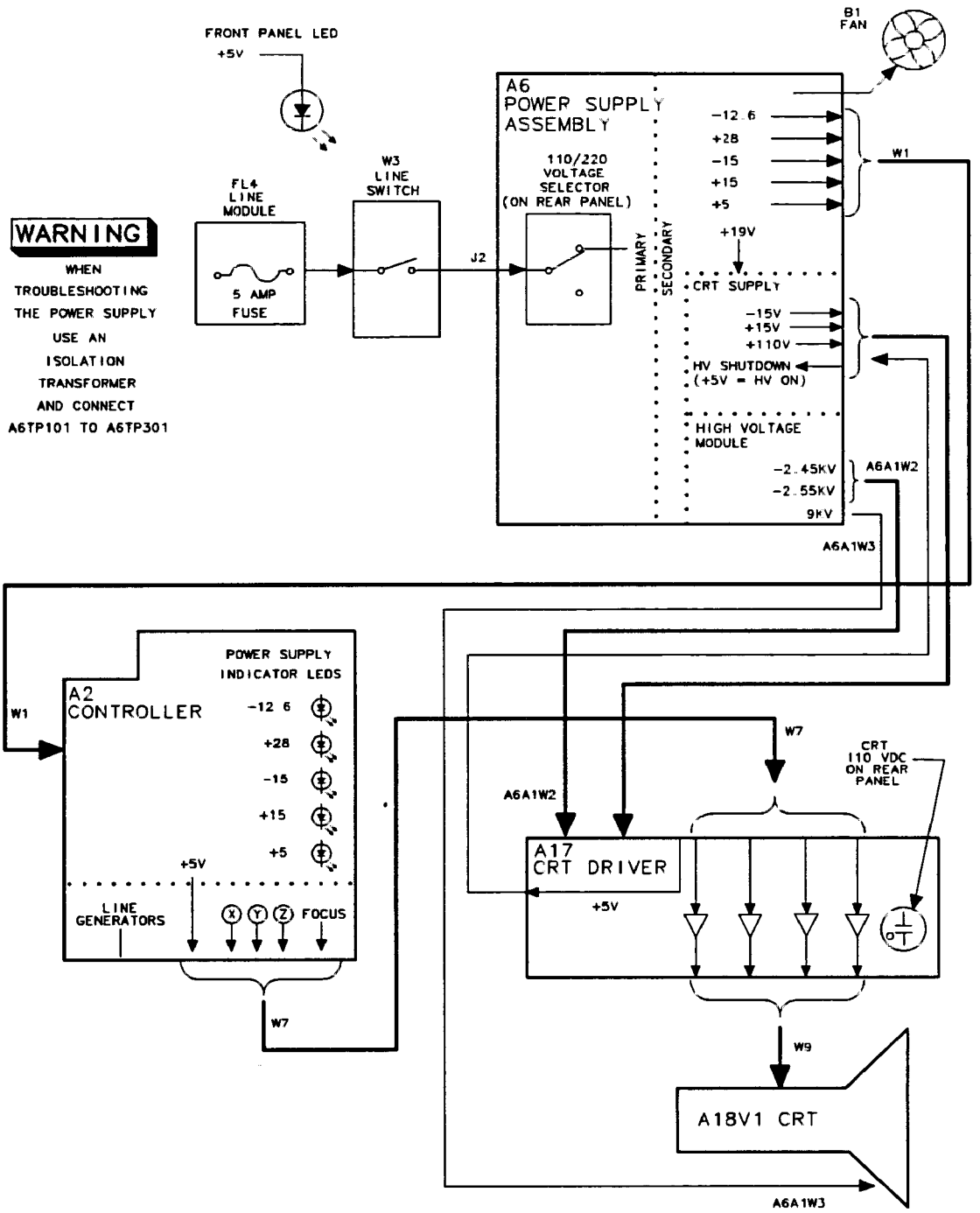

Figure 13-1. Simplified Section Block Diagram

Table 13-1. W1 Power-Cable Connections (1 of 2)

Signal	A2J1 (pins)	A3J1 (pins)	A4J1 (pins)	A5J1 (pins)	A6J1 (pins)	A14J1 (pins)	A15J1 (pins)
NC	-	-	-	-	-	-	-
NC	-	-	-	-	-	-	-
A GND	-	3	3	48	3*	3	3
NC	-	-	-	-	-	-	-
NC	-	-	-	-	-	-	-
A GND	-	6	6	45	6*	6	6
NC	-	-	-	-	-	-	-
NC	-	-	-	-	-	-	-
A GND	-	9	9	42	9*	9	9
SCAN RAMP	41	10	-	-	-	10*	-
NC	-	-	-	-	-	-	-
A GND	-	12	12	39	12*	12	12
−12.6 V	38	13	-	-	13*	-	-
−15 V	-	14	14	37	14*	14	14
A GND	-	15	15	36	15*	15	15
−15 V	-	16	16	35	16*	16	16
+15 V	-	17	17	34	17*	17	17
A GND	-	18	18	33	18*	18	18
+15 V	-	19	19	32	19*	19	19
+28 V	-	20	-	-	20*	20	20
+28 V	-	21	-	-	21*	21	21
PWR UP	29	-	-	-	22*	-	-
−15 V	-	23	23	28	23*	23	23
−15 V	-	24	24	27	24*	24	24
+15 V	-	25	25	26	25*	25	25
+15 V	-	26	26	25	26*	26	26
+5 V	-	27	27	24	27*	27	27
+5 V	-	28	28	23	28*	28	28
+5 V	-	29	29	22	29*	29	29
+5 V	-	30	30	21	30*	30	30
D GND	20	31	31	20	31*	-	31
D GND	19	32	32	19	32*	-	32
A GND	18	33	33	18	33*	33	33
A GND	17	34	34	17	34*	34	34
D GND	16	35	35	16	35*	35	35
D GND	15	36	36	15	36*	36	36
D GND	14	37	37	14	37*	37	37
D GND	13	38	38	13	38*	38	38

* Indicates signal source connectors.

Table 13-1. W1 Power-Cable Connections (2 of 2)

Signal	A2J1 (pins)	A3J1 (pins)	A4J1 (pins)	A5J1 (pins)	A6J1 (pins)	A14J1 (pins)	A15J1 (pins)
+5 V	12	39	-	-	39*	-	-
+5 V	11	40	-	-	40*	-	-
+5 V	10	41	-	-	41*	-	-
+5 V	9	42	-	-	42*	-	-
+5 V	8	43	-	-	43*	-	-
+5 V	7	44	-	-	44*	-	-
+28 V	6	45	-	-	45*	-	-
LINE TRIGGER	-	46	-	-	46*	-	-
+15 V	4	47	-	-	47*	-	-
+15 V	3	48	-	-	48*	-	-
−15 V	2	49	49	-	49*	-	-
−15 V	1	50	50	-	50*	-	-

* Indicates signal source connectors.

Troubleshooting Using the TAM

When using Automatic Fault Isolation, the TAM indicates suspected circuits that need to be manually checked. Use Table 13-1 to locate the manual procedure.

Table 13-2 lists assembly test connectors associated with each Manual Probe Troubleshooting test. Figure 13-2 illustrates the location of A17's test connectors.

Table 13-2. Automatic Fault Isolation References

Suspected Circuit Indicated by Automatic Fault Isolation	Manual Procedure to Perform
Check A2 Controller	Blanking Signal
Check All Power Supply Outputs	Dead Power Supply *(steps 1-5)*
Check Buck Regulator	Dead Power Supply *(steps ~~22~~ 11-23)*
Check Buck Regulator Control Circuitry	Dead Power Supply *(steps 11-21)*
Check High-Voltage Supplies	High Voltage Supplies
Check Input Rectifier	Dead Power Supply *(steps 6-7)*
Check Intensity Adjustments	Instensity Problems *(steps 1-4)*
Check Kick Start/Bias Circuitry	Dead Power Supply *(steps 8-10)*
Check Low-Voltage Supplies	Low Voltage Supplies

Step 22 is to late; you'll f several components; a customer did this!

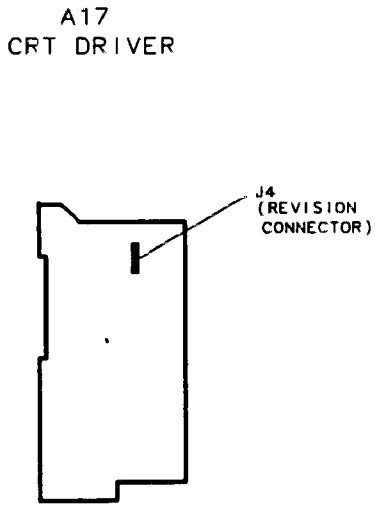

Figure 13-2. A17 Test Connector

Table 13-3. TAM Tests versus Test Connectors

Connector	Manual Probe Troubleshooting Test	Measured Signal Lines
A17J4	Revision	MS5
	X-Deflection Amplifier	MS2, MS3
	Constant Current Source	MS1
	Focus Amplifier Bias	MS4
	Intensity Amplifier Bias	MS6
	Intensity Input	MS7
	Intensity Offset	MS7
	Blanking Control	MS8

Blank Display

Use the following procedure if the instrument's display is blank. This procedure substitutes an HP-IB printer for the display.

1. Connect the printer to the HP 8562 and set the printer's address to the value required by the TAM. This is usually 1.
2. All of the power-supply indicator LEDs along the edge of the A2 Controller Assembly should be lit.
3. The rear-panel CRT +110 V DC ON indicator should also be lit.
4. Connect the TAM's probe cable to A2J11.
5. Press (MODULE), SOFT KEY #3, (STEP DOWN), SOFT KEY #1. (The top soft key is #1.)
6. The yellow LED next to A2J11 should blink approximately ten times. If the LED fails to blink correctly, troubleshoot the digital section of the A2 Controller Assembly.
7. Move the probe cable to A2J202. Press SOFT KEY #1 and wait five seconds.

8. Press SOFT KEY #5. The results should be sent to the printer.

9. Move the probe cable to A2J201, press SOFT KEY #1 and wait five seconds.

10. Press SOFT KEY #5. The results will be sent to the printer.

11. If a failure is indicated in any of these tests, the fault lies on the A2 Controller assembly. to obtain more information:

    a. Press the down arrow key one less time than the test number. (For example, press it twice for the third test on the list.)

    b. Press SOFT KEY #3, then SOFT KEY #5, and when the printout is complete, SOFT KEY #6.

12. If no failures were indicated in testing the A2 Controller, move the probe cable to A17J4.

13. Press SOFT KEY #1 and wait five seconds.

14. Press SOFT KEY #5. The results will be sent to the printer.

15. If no failure is indicated in the printout, check the high-voltage supplies as described "High Voltage Supplies" in this chapter.

Blank Display

1. If the LED above the front-panel LINE switch is lit, most of the A6 Power Supply is functioning properly.

2. Carefully check the voltages on the front-panel PROBE POWER jack. Be careful to avoid shorting the pins together. See Figure 13-3.

3. Check that the fan is operating. If the PROBE POWER voltages are correct, and the fan is turning, the A6 Power Supply is probably working properly.

4. If the rear-panel's CRT +110 V DC ON LED is lit, the high-voltage supplies should also be operating. (The high-voltage supplies will be turned off if the HV SHUT_DOWN line is low.) The A6 Power Supply feeds +5 V to the A2 Controller through W1. The A2 assembly distributes this +5 V to the A17 CRT Driver through W7. A17 sends +5 V back to A6 as the HV SHUT_DOWN signal over W8. As a result, A2, A17, W1, W7, and W8 must all be in place for the high-voltage supplies to operate.

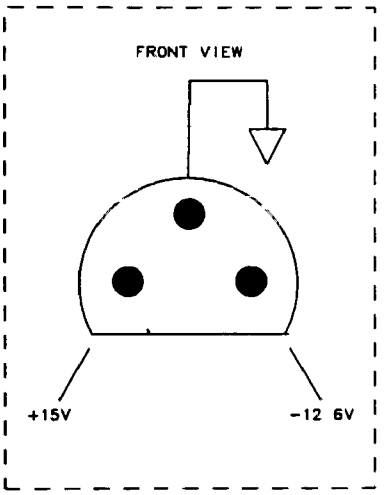

Figure 13-3. Probe Power Socket

5. If all of the power supply indicators along the outside edge of the A2 Controller assembly are lit, the A6 Power Supply is probably working properly.
6. Press FREQUENCY, (1), (GHz). A click should be heard if the original center frequency was greater than 2.9 GHz.
7. Press (8) and (GHz). A click should be heard. Press (1) and (GHz). A click should be heard. If no clicks were heard, troubleshoot the A2 Controller assembly.
8. Allow the analyzer to warm-up for at least one minute.
9. While observing the display, set the (LINE) switch OFF. If a green dot moves across the display, the CRT is probably working properly; troubleshoot either the A2 Controller or the A17 CRT Driver.
10. If a green dot does not move across the display, the A2 Controller, A6A1 HV Module, A17 CRT Driver, or A18V1 CRT might be at fault.

Display Distortion

The HP 8562 uses a vector display. The graticule lines, traces, and characters are composed of a series of straight lines ("vectors") placed end-to-end. If the vectors do not begin and end at the proper points, the display appears distorted, but in focus. Symptoms range from characters appearing elongated and graticule lines not meeting squarely, to an entirely unreadable display.

1. Use the CRT ADJ PATTERN to check for distortion. Press (RECALL), MORE, and CRT ADJ PATTERN. If vector distortion (described above) occurs, perform the Display Adjustment in Chapter 2 to test the function of the A2 assembly.
2. If there is distortion along with slight focus degradation, but the graticule lines meet (not necessarily squarely), the A17 CRT Driver, CRT, PATTERN/TRACE ALIGN adjustments, or cable connections might be at fault.

3. Perform the Display Adjustment in Chapter 2. Isolate the problem to either the X or Y axis by noting the behavior of the adjustments. If the line generator or fast zero-span portion of the adjustment fails, troubleshoot the A2 assembly.
4. If the adjustments do not remedy the problem, set the HP 8562's (LINE) switch OFF and place the A17 CRT Driver in the service position.
5. Distortion confined to one axis (vertical or horizontal only), indicates a faulty A17 assembly's X or Y Deflection Amplifier. Use the alternate good deflection amplifier for obtaining typical voltages. (There is enough symmetry in a typical display that the voltages should be similar between these circuits.)
6. Monitor the waveforms at A17TP11 and A17TP14 (or TP12 and TP13). The 50 V p-p ac component of the waveforms at the X and X' (or Y and Y') outputs should be mirror images of each other. The dc average should be 50 V.
7. The appropriate POSN adjustment (A17R25 or A17R26) should change the dc component of both X and X' (or Y and Y') outputs in opposite directions.
8. The appropriate GAIN adjustment (A17R19 or A17R20) should change the ac component in both outputs by the same amount.
9. If the display is a single dot, check the base of A17Q18 for −10.3 V ±0.3 V. Verify the signals at TP11, TP14, TP12, and TP13.
10. If signals are correct and cables to CRT are good, suspect the CRT.

Focus Problems

Focus problems may be due to a defective A18V1 CRT, improper adjustments, improper connections, or absence of high voltage. The A2 Controller's focus-control circuitry has a very minor effect on the overall focus.

Although A17's Grid Level Shifter (Function Block E) is the leading cause of A17 focus problems, Function Blocks C, D, E, F, and H generally have less effect on focus, but may cause poor focus that is a function of screen position, length of line, or intensity.

1. Connect a DVM's positive lead to A2J202, pin 2. Connect the negative lead to A2J202 pin 6.
2. Use the knob to change the focus value from 0 to 255.
3. If the DVM reads near 0 V dc with the focus set to 0, and near −10 V dc with the focus set to 255, A2's focus control circuitry is working properly.
4. Perform the Display Adjustment in Chapter 2. Note that A17R58 FOCUS has the greatest effect on focus. Adjustment A17R63 ASTIG and A17R62 PATTERN have a lesser effect, and A17R50 DYN FOCUS and front-panel adjustment (press (DISP), MORE, FOCUS, and turn knob) have very little effect on focus.
5. If the focus of some areas of the screen are worse than normal, continue with step 11. If no part of the screen can be brought to sharp focus, continue with step 6. (CRTs have some normal focus variation across their face.)

6. Turn off the analyzer and place A17 in the service position. Connect the ground lead of a high-voltage probe (HP 34111A) to the chassis, and use it with a DVM to measure A17TP15.
7. The nominal TP15 voltage is −1700 V dc, but the CRT will function with this voltage within 200 V of −1700 V dc.
8. Adjusting A17R58 FOCUS should vary the TP15 voltage by 150 V. If these voltages are correct, suspect the CRT.
9. Check the A6A1 High Voltage Module cathode supply output at A17TP16. If the cathode voltage is −2450 V ±250 V, check the Focus Grid Level Shifter.
10. If the cathode voltage is not correct, check the A6A1 High Voltage Module and its connections.
11. Connect an oscilloscope probe to A17TP9. This signal corrects the focus for the X position of the CRT beam, and for intensity level. It also provides the front-panel focus adjusting voltage.
12. Press (DISP), MORE, and FOCUS. While turning the front-panel knob, verify the dc level of the signal at TP9 adjusts about 35 V.
13. Verify that the front panel INTEN adjustment plus A17R50 DYN FOCUS changes the ac component at TP9 by 25 V.
14. Set front panel INTEN to minimum and DYN FOCUS fully counterclockwise. Verify that the ac component at TP9 is about 20 V p-p (due to X-Dynamic Focus circuit).
15. If circuit operation seems correct, A18V1 CRT is probably at fault.

Intensity Problems

Intensity problems, or absence of display, can be due to the A17 assembly's Intensity Amplifier (Function Block A), Intensity Grid Level Shifter (Function Block B), CRT (A18V1), interconnections, or lack of proper supplies or inputs to A17.

1. On the HP 8562 press (DISP), MORE, INTEN.
2. Rotate the front-panel knob (RPG), and check that the intensity changes from dim, but readable, to bright.
3. If the INTEN function does not function properly, troubleshoot the A2 Controller assembly.
4. Perform the preliminary and Z-axis portions of the Display Adjustment in Chapter 2. Verify that A17R55 MIN INTEN functions properly. If A17R55 MIN INTEN does not function properly, place the A17 CRT Driver in the service position.
5. Verify that blanking pulses are present at A17TP2 using an oscilloscope. The pulses should be approximately 0.7 V higher than normal TTL levels, approximately 1 μs wide and 4 or 7 μs apart. If the blanking pulses are not correct, check the BLANKING output of the A2 Controller Assembly and cable W7.
6. If blanking pulses are present, check A17TP10 with the oscilloscope. The TP10 signal should vary with the front-panel INTEN adjustment, and be approximately 40 V p-p

maximum. The signal will be composed of both blanking pulses and varying intensity levels for the lines being drawn.

a. If a proper signal is not present at A17TP10, check A17Q9, Q11, Q13, CR9, and CR10.

b. If blanking pulses don't reach approximately 40 V p-p with maximum intensity, turn off the HP 8562 and check A17CR13 with an ohmmeter.

c. If the TP10 signal does not vary with the front-panel INTEN adjustment, check the signals at A17TP4 and A17TP1. Both signals should vary with front panel INTEN adjustment. The TP4 signal should be up to 4 V p-p, and TP1 signal should be up to approximately 12 V p-p.

Warning **The A17 CRT Driver contains lethal voltages with lethal currents. Use extreme care when servicing this assembly. Always disconnect the power cord from the instrument before servicing this assembly. Failure to follow this precaution can represent a shock hazard which may result in personal injury.**

Note The following measurements should be made with a high-voltage probe, such as the HP 34111A. When using the high-voltage probe, connect the ground lead securely to the HP 8562 chassis.

7. Carefully measure the grid voltage at A17J7 pin 6, and the cathode voltage at A17J7 pin 4. The display will work with a cathode voltage of −2450 V ±250 V, provided the grid voltage (A17J7 pin 6) is 30 to 100 V more negative than the cathode. A17R55, MIN INTEN, should be able to adjust the voltage difference over a 60 V range to account for tube variations, and achieve proper intensity.
8. If the grid and cathode voltages are correct, turn off the HP 8562 and check CR13 with an ohmmeter. If CR13 is good, suspect the A18V1 CRT.
9. If the grid and cathode voltages are too low, turn off the power and disconnect W8 from the base of A18V1 CRT, and recheck the grid and cathode voltages.
10. If the grid and cathode voltages are still too low, refer to "CRT Supply" in this chapter and the High-Voltage Power Supply Adjustment procedure.
11. If voltages are correct when the tube is disconnected, the CRT is probably defective.

Caution The pins on the A18V1 CRT bend easily. Be careful not to bend pins when connecting W8 to A18V1.

A6 Power Supply Assembly

The HP 8562 uses a switching power supply operating at 40 kHz to supply the low voltages for most of the analyzer hardware and a 30 kHz switching supply (CRT Supply) to provide the high voltages for the CRT display. The CRT Supply will be treated as a separate supply since the remainder of A6 must be operating for the CRT Supply to operate.

Kick starting occurs when there is a fault either on the power supply or on one of the other assemblies. The power supply will try to start by generating a 200 ms pulse ("kick") every 1.5 seconds. A kick-starting power supply often appears to be dead, but the fan will make one or two revolutions and stop every 1.5 seconds.

Warning **The A6 power supply and A6A1 High Voltage Assemblies contain lethal voltages with lethal currents in all areas. Use extreme care when servicing these assemblies. Always disconnect the power cord from the instrument before servicing these assemblies. Failure to follow this precaution can represent a shock hazard which may result in personal injury.**

Warning **The voltage potential at A6A1W3 is +9 kV. Disconnect at the CRT with caution! Failure to discharge A6A1W3 may result in severe electrical shock to personnel and damage to the instrument.**

Warning **Always use an isolation transformer when troubleshooting either the A6 Power Supply or the A6A1 HV Module. When using an isolation transformer, connect a jumper between A6TP101 and A6TP301. This connects the circuit common to earth ground. Remove this jumper when the isolation transformer is not used.**

Dead Power Supply

1. Check TP308 for +5 V.
2. Check TP302 for +15 V.
3. Check TP303 for −15 V.
4. Check TP304 for +28 V.
5. Check TP305 for −12.6 V.
6. Measure the voltage at TP108 to verify the output of the Input Rectifier. The voltage should be between +215 V dc and +350 V dc.
7. If it is not within this range, check the Input Rectifier, Input Filter, and the rear-panel line voltage selector switch.
8. Measure the voltage at TP206 to verify the output of the Kick-Start/Bias-Circuitry. The voltage should be approximately +14 V dc.
9. If there is no voltage at TP206, check TP210 for pulses 200 ms wide with an amplitude of 14.7 V. If there are no pulses present, the kick-start circuitry is probably defective. If the pulses are low in amplitude (about 1 V), Q201 is probably shorted.
10. If there are pulses at TP206, or there are pulses at TP210, but not at TP206, the Buck Regulator Control circuitry is probably faulty.

11. Disconnect the power cord from the HP 8562.
12. Connect the positive output of a current-limited dc power supply to the cathode of A6CR201 and the ground to A6TP201.
13. Set the current limit to about 500 mA and the voltage to 12 V dc.
14. Connect a jumper from the power supply's +12 V output to the end of A6R202 physically nearest A6U211.
15. Connect a jumper from A6TP101 to A6TP301. This independently powers the Buck Regulator Control circuitry.
16. Connect a jumper from +12 V dc to the end of C207 nearest C209.
17. If the current draw exceeds approximately 50 mA, suspect a short in the Buck Regulator Control circuitry or a shorted CR201.
18. Check TP204 for an 80 kHz sawtooth (4 V p-p).
19. Check TP203 and TP207 for 40 kHz square (12 V p-p). If the waveforms at either TP203 or TP207 are bad, one of the FETs in the DC-DC Converter is probably defective.
20. Check TP105 and TP106 for a 12 V p-p sawtooth waveform that is flattened at the bottom. If the waveform is a squarewave, the FET to which the test point is connected has failed or shorted.
21. Check TP202 for 80 kHz pulses (12 V p-p).
22. Short TP401 to TP102. Check TP103 for a waveform similar to that in Figure 13-4.
23. If the waveform at TP202 is correct but the waveform at TP103 is bad, suspect either Q102 or CR106.

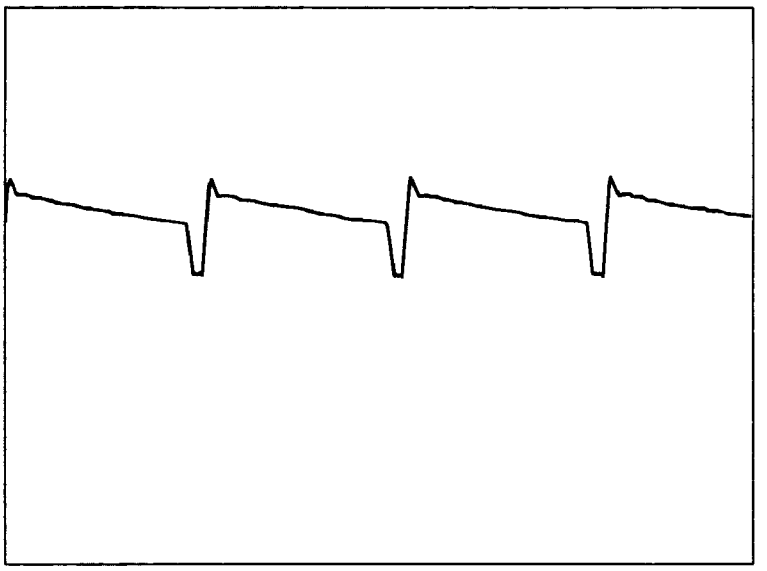

Figure 13-4. Buck Regulator Waveform

Line Fuse Blowing

1. If the line fuse blows with the (LINE) switch OFF, suspect either the Input Filter or the power switch cable assembly.
2. If the line fuse blows when the HP 8562 is turned on, disconnect the power cord and lift the drain of A6Q102 from TP108. If the line fuse still blows, suspect U102.
3. If the fuse is working properly, check A6TP108 for a voltage of between +215 V and +350 V.
4. If the voltage at TP108 is correct, disconnect the power cord; remove and check A6Q102.
5. If Q102 is shorted, Q103, Q104, CR106, and CR108 are also probably shorted. If Q102 is working properly, measure the resistance between TP102 and TP101 (positive ohmmeter lead to TP102).
6. If the resistance is less than 1 kΩ, suspect either Q103 or Q104 in the DC-DC Converter.

Supply Restarting Every 1.5 Seconds (Kick Start)

See Function Blocks G and L of A6 Power Supply Schematic Diagram.

If there is a short on the power supply or on one of the other assemblies, the power supply will attempt to "kick start." (Every 1.5 seconds the supply will attempt to start, but will be shut down by a fault condition.) The Kick Start and Bias circuits provide power for the control circuitry during power-up. The Kick Start circuitry is an RC oscillator which emits a 200 ms pulse every 1.5 seconds. These pulses switch current from the Input Rectifier through Q201 to charge C201. When the power supply is up, a winding on T103 provides power to the control circuitry. This voltage is high enough to keep Q201 turned off.

1. Monitor the waveforms at TP206 and TP208 simultaneously on an oscilloscope.
2. If the signal at TP208 goes high before the signal at TP206 goes low, an overcurrent condition has been detected. Suspect a short in the secondary (Output Rectifier, Voltage Regulators, or another assembly).

Low Voltage Supplies

1. Connect the DVM's negative lead to A6TP301.
2. Check A6TP302 for +15 V dc.
3. Check A6TP303 for −15 V dc.
4. Check A6TP304 for +28 V dc.
5. Check A6TP305 for −12.6 V dc.
6. Check A6TP308 for +5 V dc.
7. If the voltages measured above are correct but the power supply LEDs on the A2 Controller Assembly are not lit, check W1.
8. If the voltages are low, disconnect W1 from A6J1 and measure the test point voltages again. Unless a dummy load is connected to the A6 Power Supply, the voltages should return to their nominal voltages but be unregulated.

9. If the voltages do not return to near their nominal range, the A6 Power Supply is probably at fault.
10. If the +5 V supply is low, suspect the feedback circuit. Measure the voltage of the +5 V reference (U305 pin 5) and the ±7.5 V references (U306B pin 7 and U306D pin 14).
11. Check output of U306A pin 1. If the feedback circuit is working properly, the output of U306A should be near +13 V dc.
12. Check output of U302; its output should be high if the feedback circuit is working properly.

High Voltage Supplies

1. Set the (LINE) switch OFF, disconnect the power cord, and remove the power supply shield.
2. Connect a DVM's negative lead to A6TP401 and positive lead to A6TP405.
3. Set the (LINE) switch ON.
4. If the voltage displayed on the DVM is approximately +110 V dc and the rear-panel CRT +110 V DC ON indicator is lit, A6A1 HV Module is probably at fault.

Note Ideally the DVM should read the voltage written on the label of the A6A1 HV Module. If necessary, perform the High Voltage Power Supply adjustment in Chapter 2.

5. If the DVM does not read approximately +110 V dc, measure the voltage on A6U401 pin 10. This is the HV SHUT_DOWN signal and should be near +5 V dc.
6. If HV SHUT_DOWN is low, suspect a bad connection along W8 between the A6 Power Supply and the 17 CRT Driver.
7. If HV SHUT_DOWN is correct, connect an oscilloscope to A6TP402. Connect the scope probe's negative lead to TP401. Set the oscilloscope to the following settings:

   Sweep time ..... 10 μs/div
   Vertical Scale ..... 10 V/div

8. A nearly-sinusoidal waveform, greater than 30 V p-p, with an approximately +18 V dc offset, should be observed.
9. If the waveform is a dc voltage near 0 V dc with narrow, positive- and negative-going pulses, the A6A1 HV Module is faulty. If the waveform is a dc voltage near +18 V dc with narrow, positive- and negative-going pulses, connect the probe to TP403.
10. If the waveform at TP403 is a sawtooth waveform with a 1.8 V amplitude, the A6A1 HV Module is faulty.
11. If the TP403 waveform has pulses similar to those on TP402, the A6 Power Supply is probably faulty.

CRT Supply Dropping Out

See Function Block K of A6 Power Supply Schematic Diagram.

The CRT Supply is a separate switching supply which provides the +110 V dc for the A17 CRT Driver from a winding on the A6A1 HV Module. The CRT Supply operates at approximately 30 kHz. The exact frequency is determined by the inductance of the primary winding of A6A1T1 and A6C407. The supply will only operate if the HV SHUT DOWN line is high.

If the power supply keeps dropping out, there is probably a short on the A17 CRT Driver assembly.

1. Disconnect W8 from A6J4.
2. Connect an IC clip to U401 and connect a jumper between U401 pin 10 and TP308 (+5 V dc).

Note Earlier analyzers do not have a test pin at TP308. If one is not present, connect the jumper between the anode of CR313 and U401 pin 10.

3. Connect a voltmeter to TP405 and set the (LINE) switch ON.
4. Check TP405 for a voltage of approximately +110 V dc. It will probably measure higher since there is no load on the supply.
5. If the voltage at TP405 is correct, suspect a short on A17. If the voltage at TP405 is not correct, check U401 pin 8 for a sawtooth signal. The sawtooth should be flat-topped and about 5 V p-p at a frequency of about 30 kHz.
6. If the sawtooth is not flat-topped, suspect U402A and its associated circuitry.
7. If the sawtooth is correct, check the base of Q401 for 30 kHz pulses.
8. If the duty cycle is high, but there is no +110 V dc, suspect the bridge rectifier, CR401 through CR404.

Blanking Signal

1. Connect an oscilloscope probe to A2J202 pin 3. Connect the oscilloscope ground lead to TP3. Set the oscilloscope to the following settings:

   Sweep Time 2ms/div
   Vertical Scale ..... 1 V/div

2. If a 4 V p-p signal is not observed, the A2 Controller Assembly is faulty.
3. Repeat Steps 1 and 2 with the oscilloscope probe on A2J202 pin 14.
4. Set the oscilloscope to the following settings:

   Sweep Time ..... 1 μs/div
   Vertical Scale ..... 2 V/div

5. Connect the positive probe lead to A2J202 pin 15. This is the blanking output.
6. TTL-level pulses should be observed. If the signal is either always high or always low, the display will be blanked; suspect the A2 Controller Assembly.

7. If the signals on A2J202 pins 3, 14, and 15 are correct, troubleshoot the A17 CRT Driver.

Buck Regulator Control

See Function Block H of A6 Power Supply Schematic Diagram.

The Buck Regulator Control pulse-width modulates the Buck Regulator and provides a synchronized signal to the DC-DC Converter Control circuitry. The Buck Regulator Control has two feedback paths. The first is the output of the Buck Regulator, which provides coarse regulation. The second is the Feedback Circuit which samples and compares the +5 V dc output of the Output Rectifier.

U202B and associated circuitry sense the output of the Input Rectifier and will turn off U203 if the voltage at TP108 goes below approximately +170 V dc. Also, it will not allow U203 to start up until this voltage exceeds +215 V dc. A low on the output of U202B will also clear the overcurrent latch in the DC-DC Converter Control circuitry.

Thermal shutdown occurs when RT201, mounted on the main heatsink, reaches a temperature of 100 C. When this occurs, the voltage at U203 pin 13 exceeds 0.6 V and inhibits pulses to the Buck Regulator.

R203, R204, U211, and associated circuitry provide feedforward for U203. This makes the loop gain independent of input line voltage and cancels 120 Hz ripple by more than 10 dB.

U202C and its associated circuitry permit the power supply to start up at low line voltages at low temperatures. At low line voltages U202C will draw charge away from C206 through R205. This allows the Buck Regulator to turn on and draw current through the thermistors in the Input Rectifier. This warms up the thermistors, thereby decreasing their resistance and increasing the voltage at TP108. When the voltage is sufficiently high at TP108, the output of U202C will open and C206 will be allowed to charge normally.

U202A converts the sawtooth at TP204 to a squarewave to drive the DC-DC Converter Control circuitry. The frequency of the sawtooth is determined by the resistance at pin 7 of U203 and the capacitance at pin 8 of U203.

DC-DC Converter Control

See Function Block I of A6 Power Supply Schematic Diagram.

The DC-DC Converter Control circuitry divides the 80 kHz squarewave from U202A and generates two complementary 40 kHz squarewaves to drive the FETs in the DC-DC Converter. Also, U202D and its associated circuitry monitor the voltage across sense resistor R116 in the DC-DC Converter. When the current through the FETs in the DC-DC Converter exceeds 1.8 A, the voltage across R116 will cause the output of U202D to go high. This sets a latch in U204 which turns off U203.

Power Up

See Function Block M of A6 Power Supply Schematic Diagram.

The Power Up circuitry generates the PWR UP signal, which tells the microprocessor that the supplies are up and stable. PWR UP will go high when the +5 V dc supply exceeds +4.99 V dc. PWR UP will go low when this voltage drops below +4.895 V dc. Once PWR UP is set low, it will stay low for at least 50 ms before going high, even if the +5 V dc supply exceeds +4.99 V dc before 50 ms have elapsed.

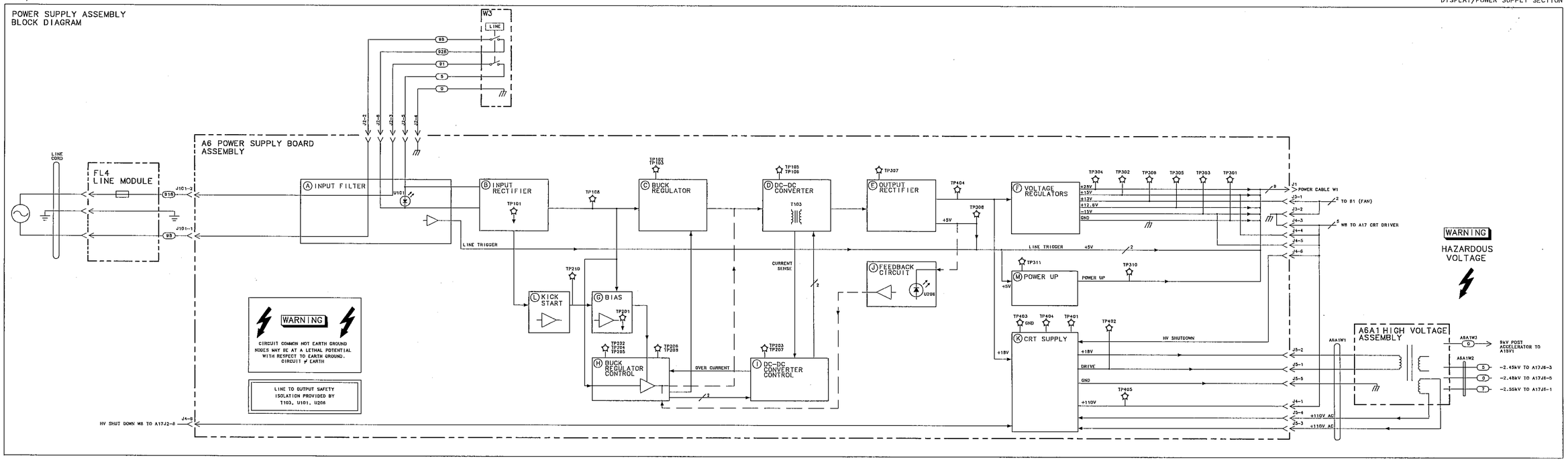

FIGURE 13-5. A6 POWER SUPPLY BLOCK DIAGRAM

A17 CRT DISPLAY DRIVER BLOCK DIAGRAM

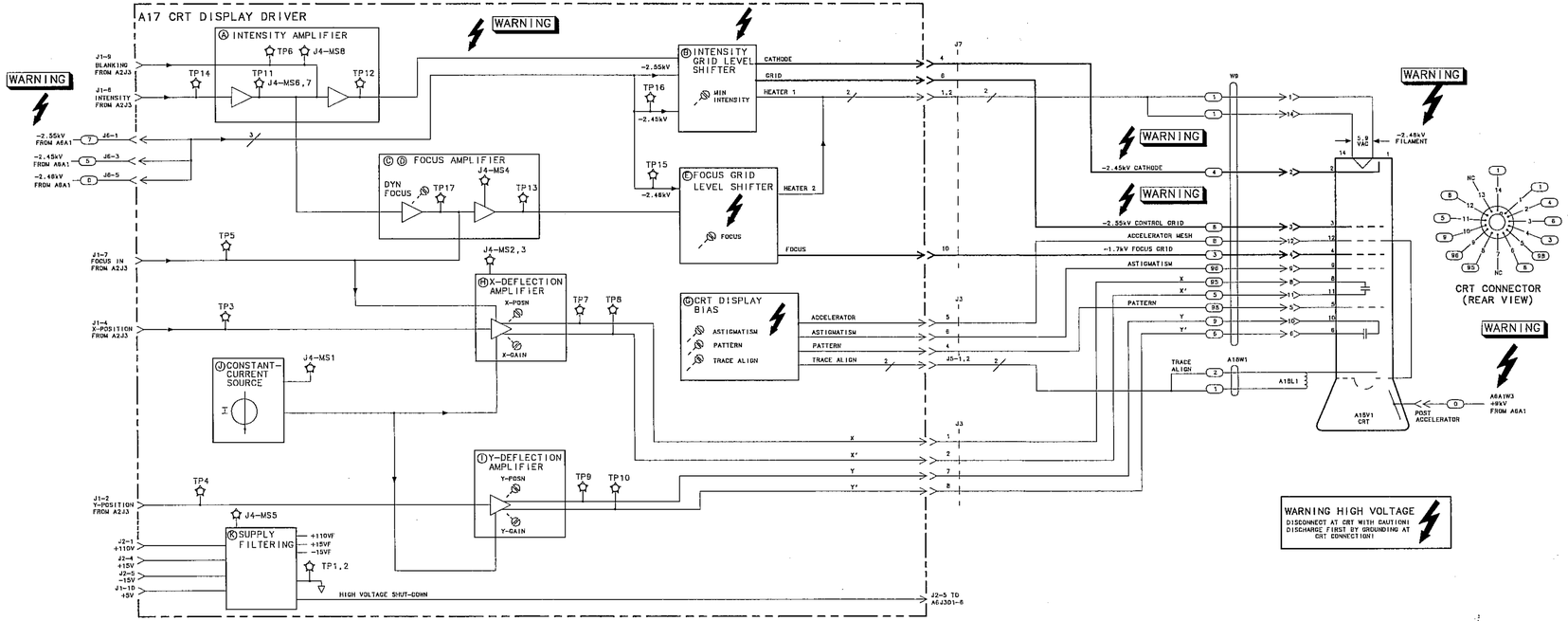

FIGURE 13-6. A17 CRT DRIVER BLOCK DIAGRAM

A

Component-Level Information Packets

Component-level information is available for selected instrument assemblies. The information for each repairable assembly is provided in the form of Component-Level Information Packets (CLIPs). Each CLIP contains a parts list, component-location diagram, and schematic diagram. Each CLIP has an HP part number that is changed whenever the HP part number for its related instrument assembly is changed.

Table A-1 lists board assembly part numbers and corresponding component-level information packet (CLIP) part numbers. Table A-2 lists documented RF board assemblies shipped with HP 8562A/B Spectrum Analyzers that have serial prefixes below 3029A.

Updated or replacement CLIPs may be ordered through your local Hewlett-Packard Sales or Service office by using the CLIP part number provided in Table A-1.

A complete set of the latest version of CLIPs can be ordered using HP Part Number 08562-90124.

CLIPs are packaged in protective plastic envelopes. To use and store your CLIPs effectively, the following accessories are available.

2-1/2 inch CLIP binder (for 25 to 30 packets)	HP part number 9282-1134
2 inch CLIP binder (for 15 to 25 packets)	HP part number 9282-1133
1-1/2 inch CLIP binder (for fewer than 15 packets)	HP part number 9282-1132
Replacement plastic CLIP envelopes	HP part number 9222-1536

Note CLIPs may not be available for recently introduced assemblies.

08562-90123

Post-It™ brand fax transmittal memo 7671 | # of pages ▸ 1

To Sanjay Sood	From Greg Brahms
Co. HP	Co. HP
Dept. Cust Supp.	Phone # 707-577-4658
Fax # 91-11-6461117	Fax # 707-577-5693

Table A-1. HP 8562A/B Spectrum Analyzer Documented Assemblies

Board Assembly	Instrument Serial Prefix	Assembly Part Number	CLIP Part Number*
A1A1 Keyboard	below ~~3204A~~ 3148A ~~All Serials~~ 3204A ~~3024A~~ & above	08562-60031 08562-60140	**08562-90110***
A2 Controller Assembly	2724A and below 2733A through 2913A 2923A ~~and above~~ to ? 3032A through 3121A 3123A through	08562-60032 08562-60051 08562-60110 08562-60124 08562-60131	08562-90141 08562-90125 **08562-90126*** 08562-90166
A3 Interface Assembly	2741A and below 2745A through 2852A 2909A through 3029A 3040A ~~and above~~ thru 3051A 3115A thru 3120A 3121A ~~& above~~ thru 3148A ~~3148~~ 3204A & above	08562-60033 08562-60052 08562-60097 08562-60138 08562-60142 08562-60144 08562-60144	08562-90142 08562-90136 08562-90137 **08562-90154***
A4 Log Amplifier	2913A and below 2923A ~~and above~~ thru 3021A 3022A & above	08562-60034 08562-60109 08562-60132	08562-90127 **08562-90128***
A5 IF Filter	2703A and below 2712A through 2741A 2745A through 2923A 2927A through 2929A 2950A and above	08562-60035 08562-60049 08562-60070 08562-60082 08562-60120	08562-90143 08562-90144 08562-90138 08562-90139 **08562-90140***
A6 Power Supply	2750A and below 2809A through 2911A 2912A and above	08562-60036 08562-60058 08562-60094	08562-90145 08562-90146 **08562-90111***

*Denotes the current version of board assembly.

08562-90123

Table A-1.
HP 8562A/B Spectrum Analyzer Documented Assemblies (continued)

Board Assembly	Instrument Serial Prefix	Assembly Part Number	CLIP Part Number*
A14 Frequency Control	2703A and below	08562-60037	08562-90129
	2712A through 2745A	08562-60050	08562-90130
	2750A through 2750A	08562-60068	08562-90131
	(8562A) 2805A through 2923A	08562-60074	08562-90132
	(8562B) 2809A through 2927A		
	(8562A) 2927A through 2952A	08562-60055	08562-90133
	(8562B) 2929A through 2952A		
	3006A ~~and above~~	08562-60123	**08562-90134***
A15 RF (Std + Opt. 001)	3029A ~~and above~~	08562-60118	**08562-90112***
A15 RF (Opt. 003 + 013)	3029A and above	08562-60117	**08562-90113***
A16 CAL OSC	2712A and below	08562-60041	08562-90147
	2724A through 2750A	08562-60054	08562-90148
	2809A and above	08562-60065	**08562-90135***
A17 CRT Driver	~~All Serials~~	08562-60039	**08562-90114***
A19 HP-IB	All Serials	08562-60042	**08562-90115***

*Denotes the current version of board assembly.

Table A-2.
RF Boards Shipped with HP 8562A/B's Serial Prefixed below 3029A

RF Board Option	Instrument Serial Prefix	Assembly Part Number	CLIP Part Number
A15 RF Board, Standard	2642A and below	08562-60038	08562-90149
	2703A through 2737A	08562-60048	08562-90150
	2741A through 2912A	08562-60059	08562-90151
	2913A through 3009A	08562-60103	08562-90104
	3017A through 3027A	08562-60122	08562-90107
	3120A 3137A & above	08562-60116 08562-60157	
A15 RF Board, Option 001	2737A and below	08562-60044	08562-90152
	2733A through 2912A	08562-60060	08562-90153
	2913A through 3009A	08562-60104	08562-90105
	3017A through 3027A	08562-60126	08562-90109
A15 RF Board, Option 003	2913A through 3009A	08562-60101	08562-90102
	3017A through 3027	08562-60121	08562-90106
	3120A thru 3123A 3133A + above	08562-60115 08562-60157	
A15 RF Board, Option 013	2913A through 3009A	08562-60102	08562-90103
	3017A through 3027A	08562-60125	08562-90108

08562-90123

	A1	A2	A3	A4	A5	A14	A15	A17
2929A	08562-60031	08562-60110	08562-60097	08562-60109	08562-60087	08562-60055	08562-60103	08562-60035
2950A					08562-60120			
2952A								
3006A						08562-60123		
3017A							08562-60122	
3027A				08562-60133				
3029A							08562-60118	
3040A			08562-60138					
3043A								
3051A								
3115A			08562-60142					
3119A*								08562-60112
3120A							08562-60146	
3121A		Note 1	08562-60149					
3129A		08562-60151						
3133A								
3136A						08562-60153		
3137A							08562-60157	
~~3146A*~~								~~08562-60165~~
3147A								08562-60165
3148 → 3204A	08562-60140		08562-60144					

* "Ghost" prefixes (called out in PCO but never shipped) exist because another prefix change is implemented before any instruments with the "ghost" are shipped.

Note 1: 08562-60124 shipped with the following serials (prefix 3115A):
06115, 06110, 06109, 06134, 06112, 06119, 06140, 06093, 06141, 06136, 06129, 06139, 06116, 06131, 06126, 06120, 06123, 06118, 06125, 06114, 06113, 06124.

08562-60123

NATIONAL 42 381 50 SHEETS 5 SQUARE 42 382 100 SHEETS 5 SQUARE 42 389 200 SHEETS 5 SQUARE

A1
08562-60031 → 08562-60140
3148A → 3204A PCO 6979

A2
08562-60110 → 08562-60124
3121A → 3129A PCO 6572

08562-60124 → 08562-60151
3129A → 3129A PCO 7135

A3
08562-60037 → 08562-60138
3029A → 3040A PCO 6836 6816

08562-60138 → 08562-60142
3035A → 3115A PCO 7024

08562-60142 → 08562-60149
3120A → 3121A PCO 7131

08562-60149 → 08562-60144
3148A → 3204A PCO 7330

A4
08562-60103 → 08562-60133
3021A → 3027A PCO 6699 3021A doesn't exist Spring Burn

A5
08562-60082 → 08562-60120
2929A → 2950A PCO 6442

A14
08562-60055 → 08562-60123
2952A → 3006A PCO 6573

08562-60123 → 08562-60153
3133A → 3136A PCO 7214

08562-90123

A15

08562-60103 → 08562-60122
3006A → 3017A PCO 6524

08562-60122 → 08562-60118
3027A → 3023A PCO 6505

08562-60118 → 08562-60146
3115A → 3120A PCO 7122

08562-60146 → 08562-60157
3136A → 3137A PCO 7237
~~3136A?~~

A17

08562-60039 → 08562-60112
3115A ~~302A~~ → 3119A PCO ~~6287~~ 6835

08562-60112 → 08562-60165
~~3124A → 3147A~~ PCO 7317
3147A → 3148A

A3 08563-60009 08562-60142
08563-60013 08562-60149

A15 08562-60157

Now the issue is
SUs for 6835 (CRT Δ)

PCO 6237 (ΔA15) and 7214 (ΔA14) have same old prefix & different new prefix

PCO 6699 (ΔA4) Prefix 302A doesn't exist

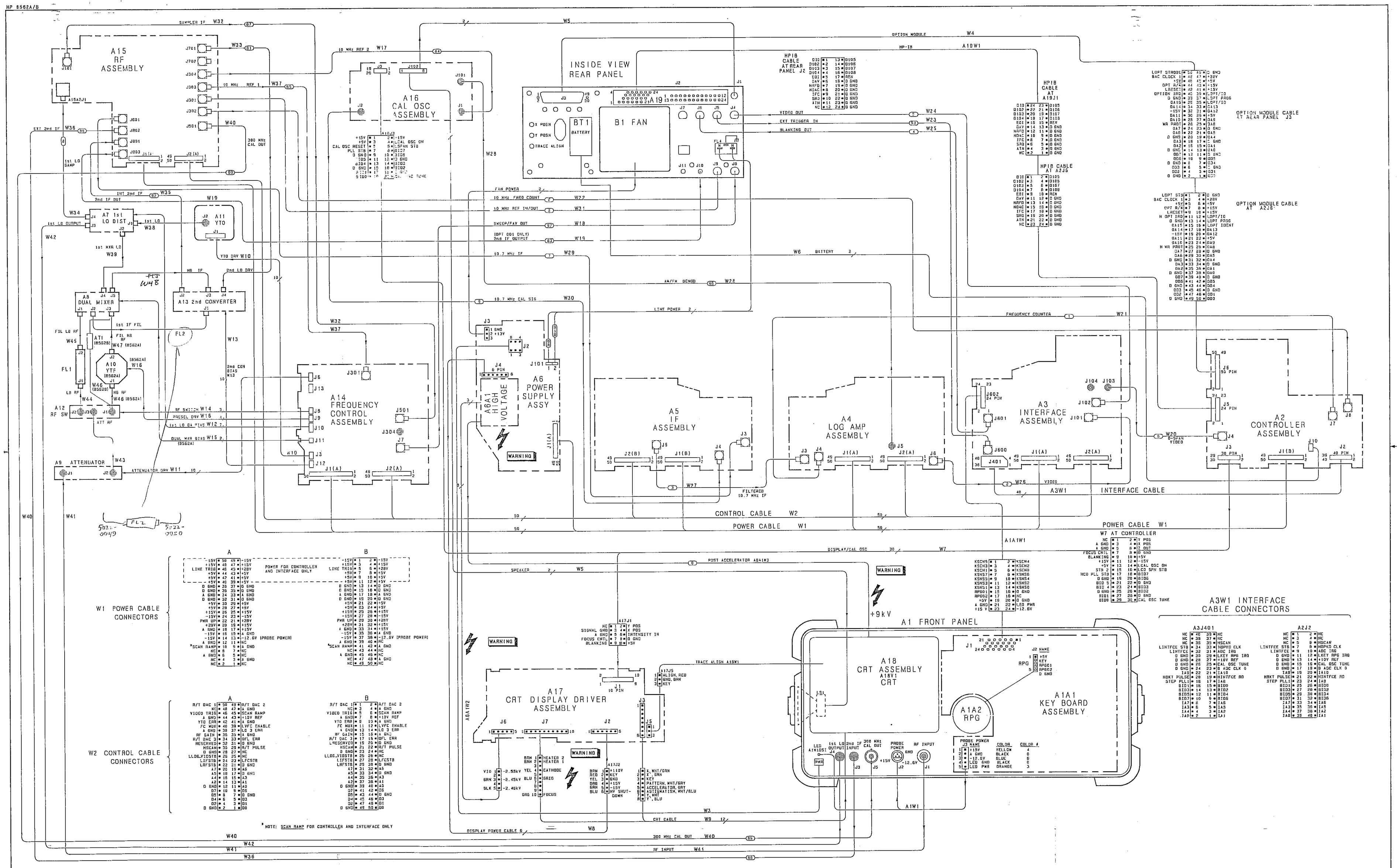

Figure A-1. 8562A/B Interconnect Diagram: 08562-90016